MMC DRAWING SET · REV AT

MULTI-MODAL CORRIDORS · HIGH-LEVEL SUMMARY SHEETS · 23 NOVEMBER 2026

MMC-DWG-001 · ATS COMPONENTS

01 Cutter head
02 Anchor latch + contingency
03 Caisson ring
04 Expansion packer
05 Tension tubular
06 Tension lock
07 Pylon joint
08 Caisson head
09 Pylon cap
10 Centralisers + insert packer

MMC-DWG-002 · TOPSIDE MODELS

01 MMC-VC single-leg viaduct
02 MMC-VB two-deck viaduct (Phase 0)
03 MMC-VA five-level viaduct (Big Bertha)
04 MMC-TB standard transmission tower
05 MMC-TB Guyed
06 MMC-TA dual-tower portal, one beam
07 Across terrain: 4 m base to 2.5 m top
08 MMC-VD three-level viaduct, services deck

MMC-DWG-003 · CONSTRUCTION

00 Construction sequence
01–03 Dual drilling rig (rail)
04 Mobile drilling rig
05 Drilling from the viaduct
06 First spans from the ground
07–08 Level 1: steps 3–8
09 Steps 9–10
10–11 Level 2: steps 11–15
12 Foundation drilling, step by step
13 Build scenarios
14 Manufacture: skin, rib, die
15 Transmission line: MMC-TA steps
16 Pipeline install

MMC-DWG-008 · CITIES

01 A desert zone: the Sahara
02 Growth: hub to leaf
03 Towns along the corridor
04 The town as a hub
05 Town plan
06 PV farming
(illustrative)

MMC-DWG-009 · WATER

01 Water harvesting
02 Built from the deck
03 System map: mock scenario
04 Australia: the MMA plan
(illustrative)

MMC-DWG-000 · OVERVIEW

00 Cover sheet
01 The MMC Architecture

MMC-DWG-004 · CAISSON TYPES

01 Solid caisson ring
02 Segmented caisson ring
03 Castellated caisson ring
04 Flush caisson ring
(more types added as designed)

MMC-DWG-005 · MODULAR COMPONENTS

01 MMC-VC
02 MMC-VB
03 MMC-VA
04 MMC-TB
05 MMC-TB Guyed
06 MMC-TA
07 MMC-VD

MMC-DWG-006 · MM LINES

01 Maglev · 02 Hyperloop · 03 Electric Freight · 04 Service Rail · 05 Road · 06 HVDC · 07 Water Pipeline · 08 Gas and Liquid Fuels · 09 Hydrogen · 10 Fibre · 11 Aqueduct · 12 HVDC Option

MMC-DWG-007 · SUBSEA

01 Subsea Line Lane · 02 Lay, DP Formation · 03 Lay, Rafted Alongside · 04 Near-Shore Manifold · 05 Service Fleet · 06 Standard Sea Platform

STATUS

High-level summary sheets: what each part is and does. Not engineering detail.
Assumptions and site conflicts are listed in OPEN_ITEMS, not on the sheets.
Patents: P1 Foundation Core · P2 Integrated Foundation · P3 Drilling System · P4 Architectural Framework · P5 Viaduct Topside · P6 Pole and Tower · P7 Megafactory.

MMC-DWG-000-01 · THE MMC ARCHITECTURE

OVERVIEW · ANCHOR TENSION SYSTEM (ATS) · THREE TOPSIDES ON THE SAME FOUNDATION · SCHEMATIC, NOT TO SCALE

ATS · ANCHOR TENSION SYSTEM

THE FOUNDATION UNDER EVERY MMC STRUCTURE

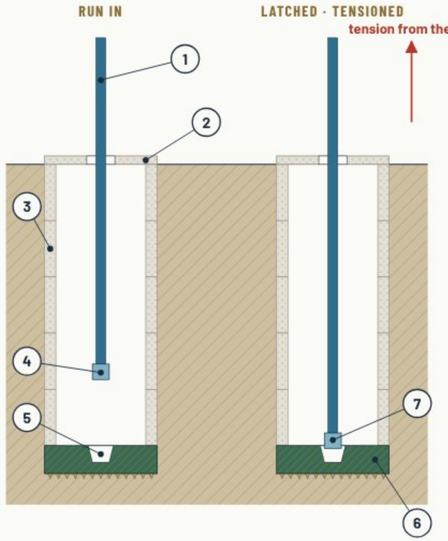

SINGLE LEG · CROSS-ARM TRANSMISSION

MMC-TB · CROSS-ARMS CAPTURED AT CONNECTIONS

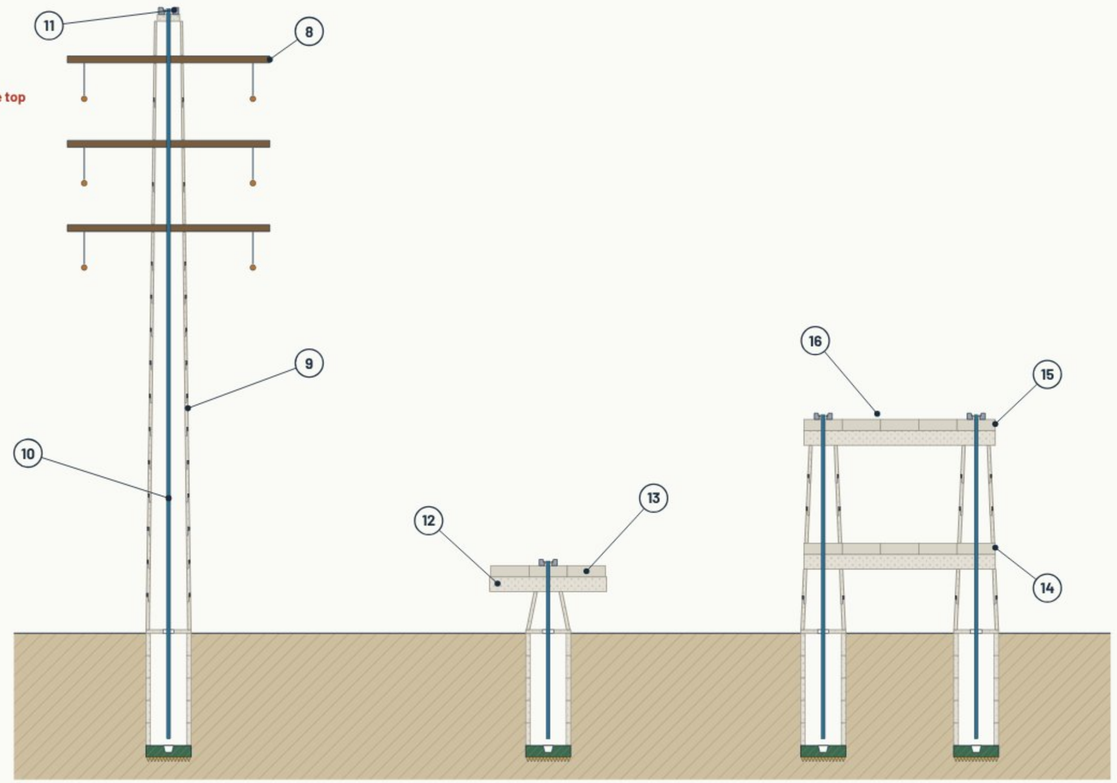

SINGLE LEG · VIADUCT

MMC-VC · ONE DECK

DUAL LEG · VIADUCT

MMC-VB · TWO DECKS · LEGS AT THE OUTER EDGES

Precast concrete · Tension tubular · Anchor latch · Cutter head · Tension lock · Cross-arm

SUMMARY

THE MMC ARCHITECTURE

- The Anchor Tension System (ATS) is the foundation under every MMC structure.
- Install: (1) topside installed; (2) tension tubular run in, threaded ~12 m joints; (3) anchor latches into the receptacle in the cutter head.
- (4) Tension applied to the tubular at the topside by hydraulic tooling, placing the structure in compression; (5) the tension lock holds the required tension.
- Three topsides on the same foundation: single-leg cross-arm transmission (MMC-TB), single-leg viaduct (MMC-VC), and dual-leg two-deck viaduct (MMC-VB).

PATENTS P1 · P2 · P4 · P7

CALLOUTS

1. Tension tubular (~12 m threaded joints)
2. Caisson head
3. Caisson rings (2 m precast)
4. Anchor latch
5. Anchor receptacle
6. Cutter head = the anchor (stays in ground)
7. Latched in the receptacle
8. Cross-arm captured at a connection
9. Hollow pylon joints, 4 m base to 2.5 m top
10. Tension tubular, anchored and tensioned
11. Tension lock on the cap
12. HB1 cross beam
13. Longitudinal beams, laid flush
14. HB1 cross beam (freight, 8 m)
15. HB3 cross beam (maglev, 19 m)
16. Flush longitudinal beams

MULTI-MODAL CORRIDORS · MMC-DWG-000-01 · THE MMC ARCHITECTURE

Schematic — not to scale unless dimensioned · P1 · P2 · P4 · P7
Rev F · 21 Nov 2026 · BB (Boh Brett) Murrell

MMC-DWG-001-01 · CUTTER HEAD

ATS COMPONENT SHEET 1 · SUMMARY · HALF SECTION: DRILLING (LEFT) / IN SERVICE (RIGHT)

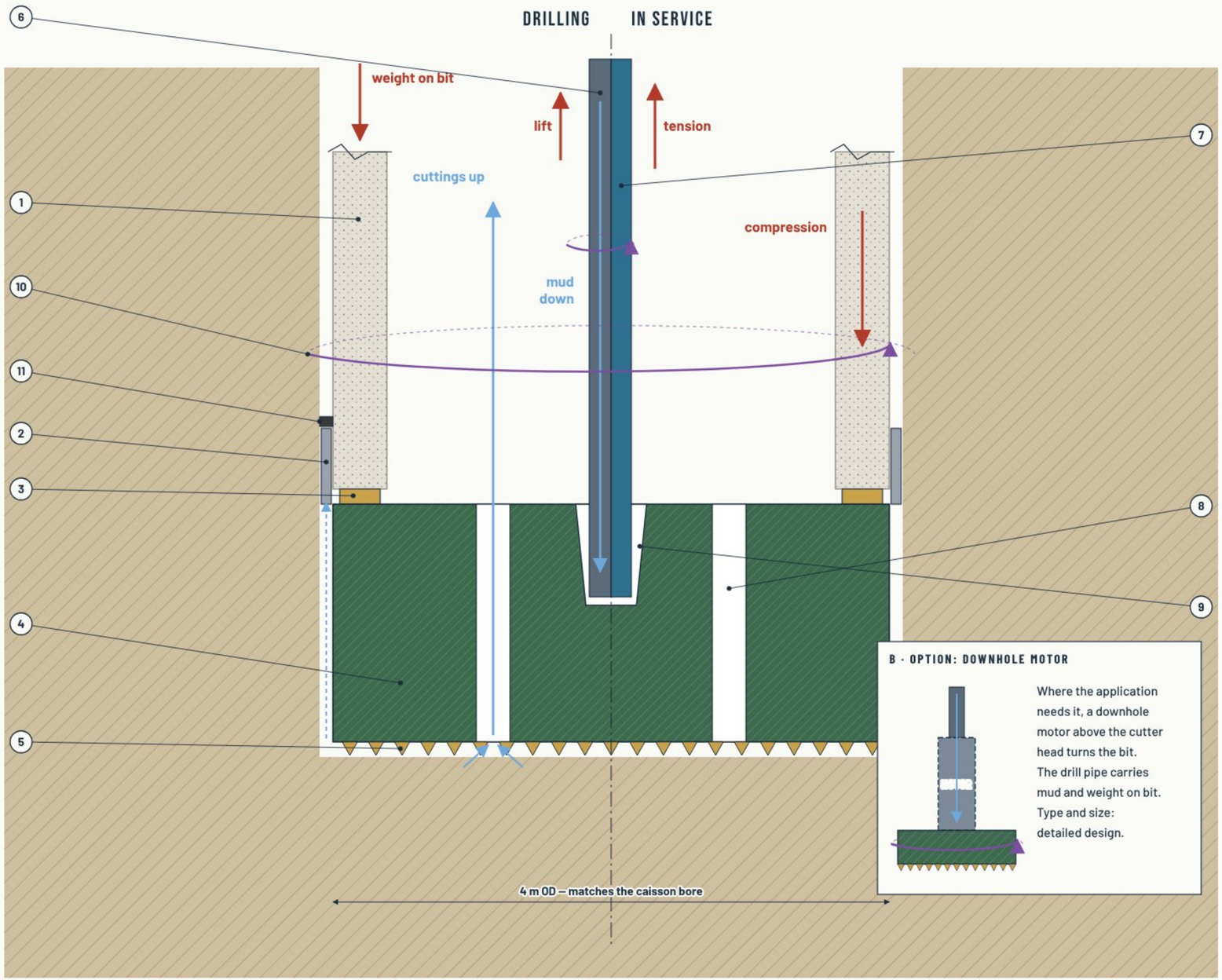

SUMMARY

CUTTER HEAD

- Drills the foundation bore at the base of the caisson.
- Always stays in the ground as the anchor: the caisson and topside loads bear on it, and the tension tubulars latch into it. One per foundation.
- Drive: the top drive through the drill pipe, or a downhole motor where the application needs it. The caisson spinner turns the caisson.
- Weight on bit = caisson ram force + drill string weight, combined to give the exact load. The drill string can be lifted to take load off the bit, or ram force added.
- A thrust bearing decouples the two rotations and passes ram force into the bit.
- Most returns go up the caisson to the mud system; some come up outside it. A wiper seal at the bit or at the surface captures run-off (detail to be determined).
- Body: cast high-alloy steel with bit inserts. Detailed design to come.

PATENTS P1 · P3

CALLOUTS

1. Lead caisson ring
2. Debris sleeve
3. Thrust bearing (decouples the two rotations)
4. Cutter head = the anchor
5. Cutting inserts
6. Drill pipe (drilling only) turned by the top drive
7. Tension tubular (in service)
8. Return bore
9. Anchor receptacle
10. Caisson turned by the caisson spinner
11. Wiper seal (TBD): run-off up the outside of the caisson

Precast concrete · Cutter head · Pads / inserts · Debris sleeve · Drill pipe · Tension tubular · Mud / cuttings · Loads · Rotation · Wiper seal · Downhole motor (option)

MULTI-MODAL CORRIDORS · MMC-DWG-001-01 · CUTTER HEAD

Schematic — not to scale unless dimensioned · Patents P1, P3
Rev H · 21 Nov 2026 · BB (Boh Brett) Murrell

MMC-DWG-001-02 · ANCHOR LATCH & RELEASE

ATS COMPONENT SHEET 2 · SUMMARY · FOUR STATES: RUN IN · ENGAGED · TENSIONED · RELEASE · PLUS CONTINGENCY ANCHOR

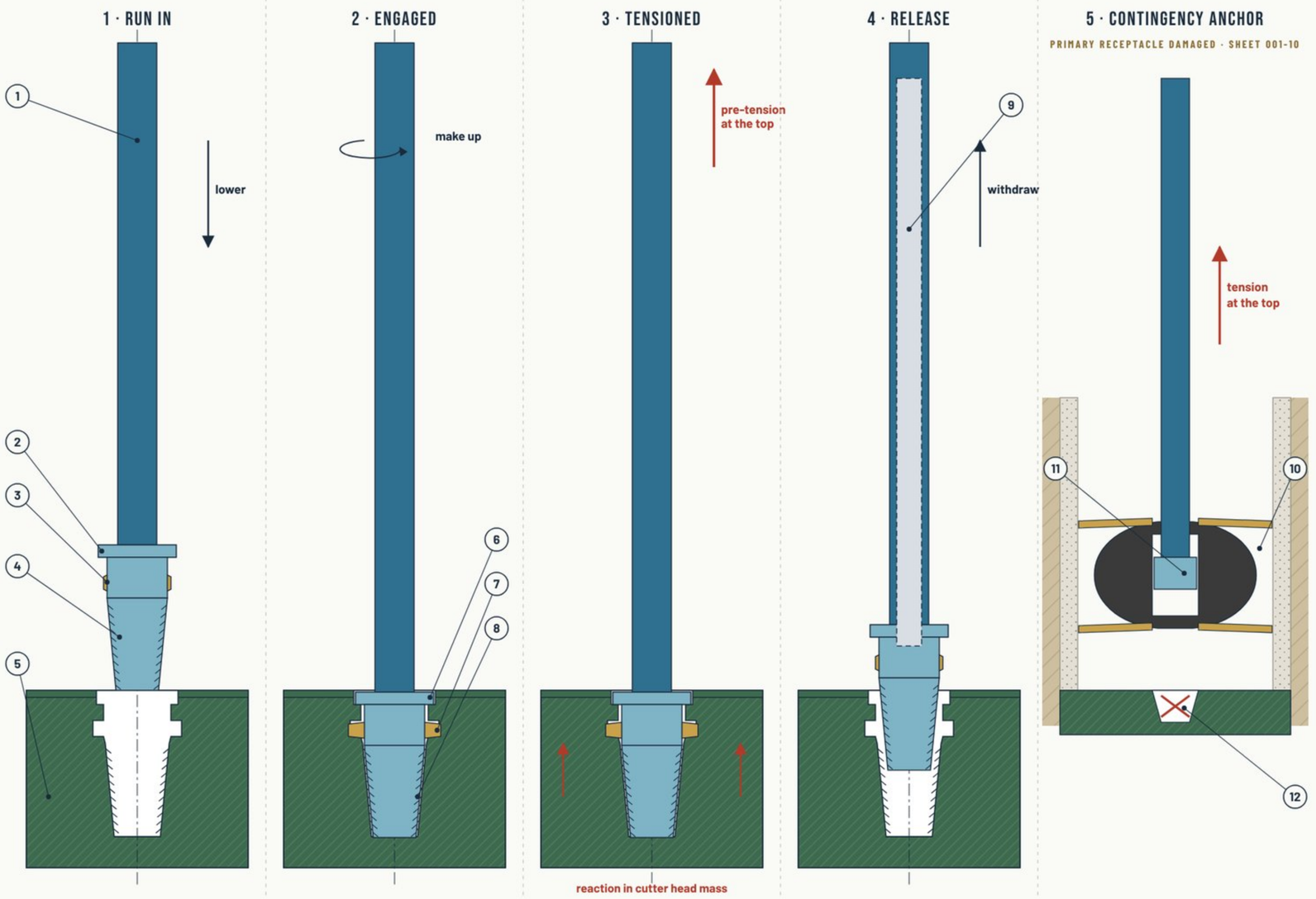

Dogs retracted. Lowered through the stack.

Pin in box, collar on shoulder, dogs sprung into the groove.

Load path: tubular → thread + dogs → cutter head (the anchor).

Release tool retracts the dogs; tubular pulled from the surface.

Insert packer set above the damage; the anchor latches inside it.

Tension tubular · Latch sub · Latch dogs / slips · Cutter head · Temporary tooling · Packer element · Loads / damage

SUMMARY

ANCHOR LATCH

- Joins the bottom of the tension tubular to the cutter head, which is the anchor.
- Run in from the surface after drilling; it seats on the shoulder and the dogs spring into the groove.
- Tension is applied at the top of the structure; the latch carries it into the cutter head.
- Uses the same receptacle as the drill pipe: one connection serves drilling, then service.
- Can be released and the tubular withdrawn from the top for inspection or replacement. Because it releases, the tubular can also be latched mid-construction where the design calls for it.
- Contingency (5): insert packer set above a damaged receptacle; the anchor latches inside it.

PATENTS P1 · P2

CALLOUTS

1. Tension tubular
2. Shoulder collar
3. Latch dogs (retracted)
4. Pin: tapered external thread
5. Cutter head
6. Receptacle shoulder
7. Dogs in latch groove
8. Box: tapered internal thread
9. Release tool (indicative)
10. Insert packer, set
11. Anchor latched in the packer
12. Damaged primary receptacle

MULTI-MODAL CORRIDORS · MMC-DWG-001-02 · ANCHOR LATCH

Schematic — not to scale unless dimensioned · Patents P1, P2
Rev D · 10 Nov 2026 · BB (Boh Brett) Murrell

MMC-DWG-001-03 · CAISSON RING

ATS COMPONENT SHEET 3 · SUMMARY · STANDARD RING · LEAD RING · RINGS IN THE BORE

A · STANDARD RING

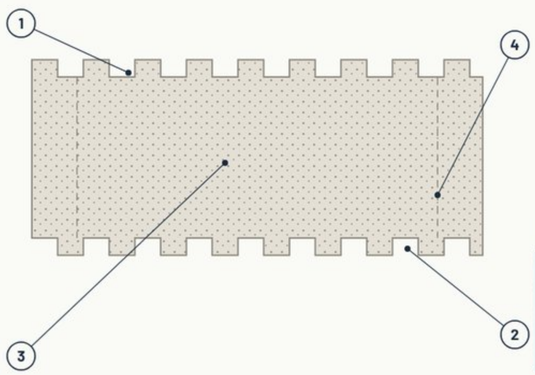

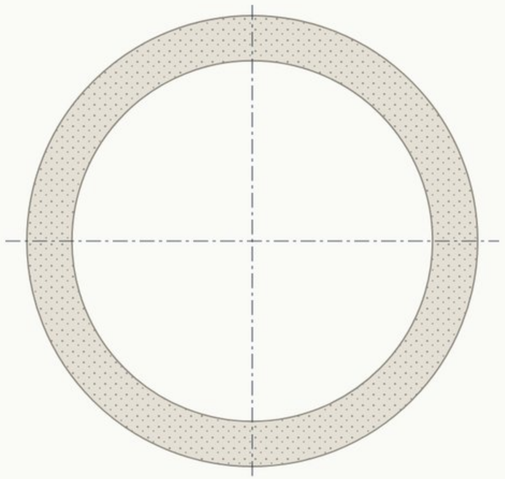

Plan: a hollow ring, one module repeated

B · LEAD RING

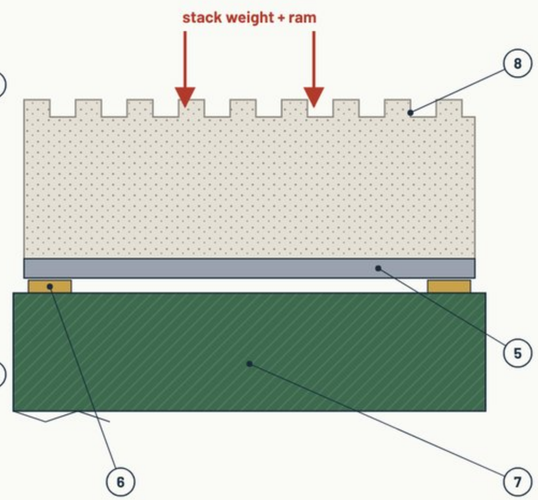

First ring in the stack. Its flat steel base bears on the cutter head, so the two turn independently.

C · IN THE BORE

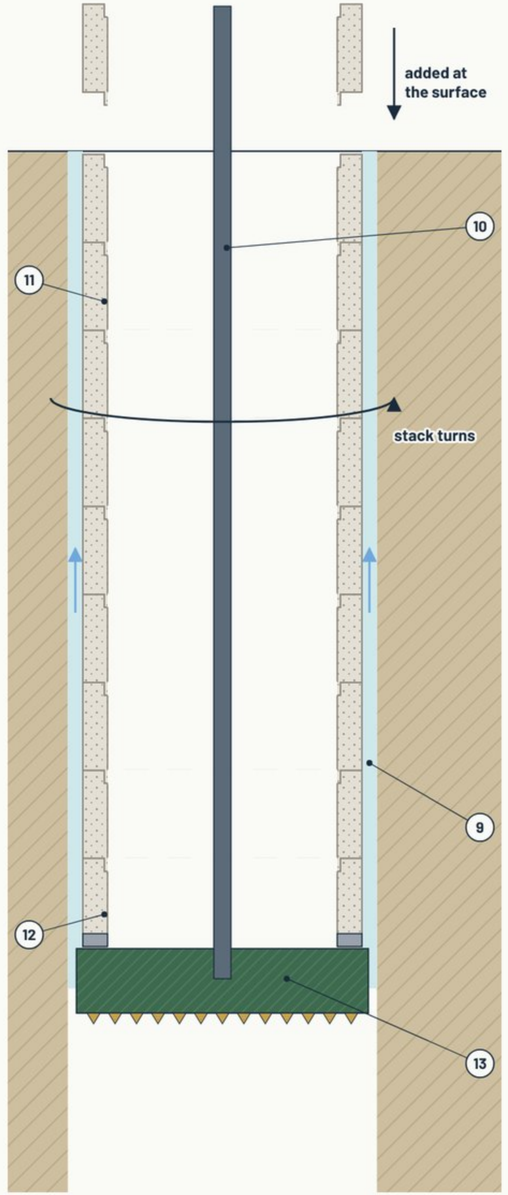

SUMMARY

CAISSON RING

- Precast concrete ring, 4 m outside diameter. The foundation caisson is a stack of identical rings.
- Rings are added at the surface as the cutter head drills down; the stack follows the bore.
- Castellated faces lock ring to ring, so the whole stack can be turned to break ground friction as it advances.
- The lead ring has an embedded steel bearing ring and bears on the cutter head through the thrust pads.
- At depth the weight of the caisson holds it. Grout in the annulus is optional, placed after drilling depth is reached, by ground. In service the stack is the shell around the tension tubular.

PATENTS P1 · P2 · P7

CALLOUTS

1. Castellated upper face
2. Castellated lower face
3. Precast concrete body
4. Bore (hidden line)
5. Embedded steel bearing ring
6. Thrust pads
7. Cutter head
8. Castellated upper face
9. Grout annulus (optional)
10. Drill pipe (tension tubular in service)
11. Castellated joints
12. Lead ring
13. Cutter head

Precast concrete · Steel bearing ring · Pads / inserts · Cutter head · Drill pipe · Grout · Loads

MULTI-MODAL CORRIDORS · MMC-DWG-001-03 · CAISSON RING

Schematic — not to scale unless dimensioned · Patents P1, P2, P7
Rev D · 10 Nov 2026 · BB (Boh Brett) Murrell

MMC-DWG-001-04 · EXPANSION PACKER

ATS COMPONENT SHEET 4 · SUMMARY · TWO VERSIONS: SEGMENTED-RING · SOLID-RING

A · SEGMENTED-RING VERSION

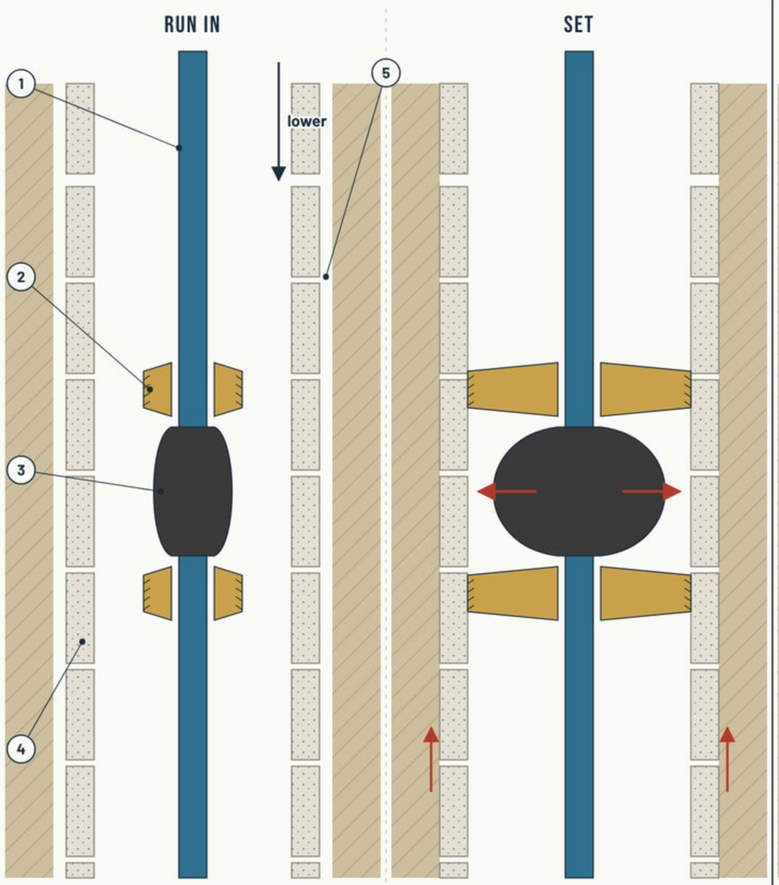

Segments sit inside the bore with an open annulus.

Packer drives the segments out against the bore wall: radial force becomes axial restraint.

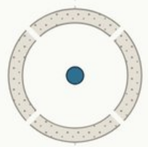

Plan: segmented ring

B · SOLID-RING VERSION

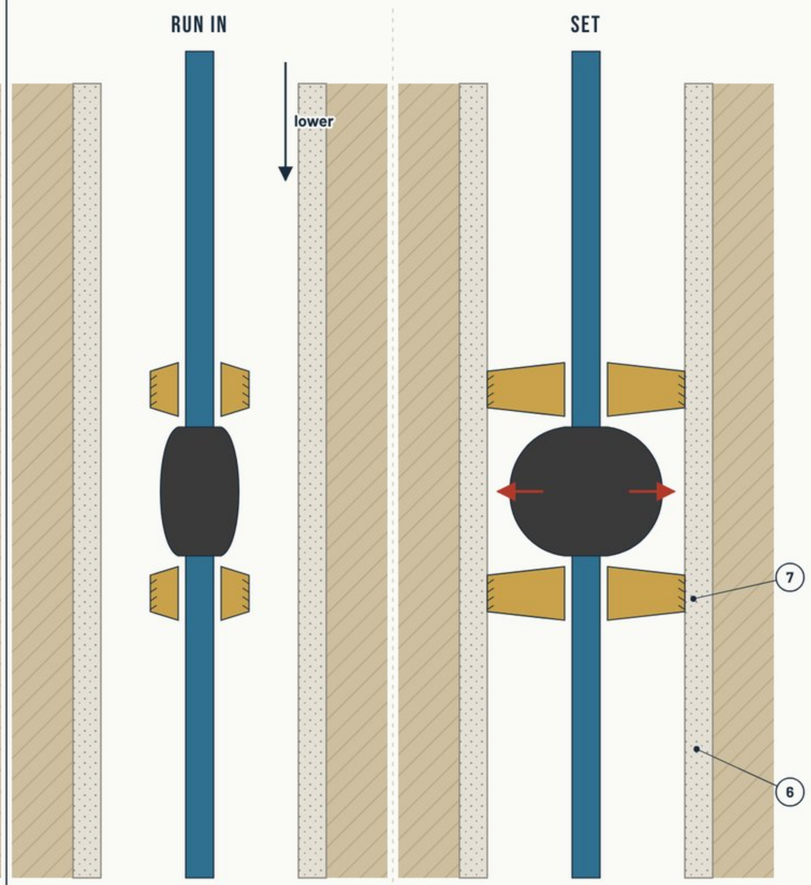

Lowered on the tubular to the chosen depth.

Slips grip the concrete face. Couples the tubular to the caisson at that depth.

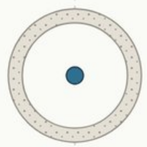

Plan: solid ring

Precast concrete · Tension tubular · Slips · Packer element · Loads

SUMMARY

EXPANSION PACKER

- Two versions, both run in on the tension tubular. Slips and element expand outward when set.
- Segmented-ring version: drives the segments out against the bore wall; the radial force becomes axial restraint. Optional, soil dependent.
- Solid-ring version: sets at a chosen depth, slips gripping the inside concrete face.
- It also acts as a centraliser for the tubular.
- Once the anchor is latched, it locks onto the tubular, coupling the caisson to the tension column and adding tensile strength.

PATENTS P1 · P2

CALLOUTS

1. Tension tubular
2. Slips
3. Packer element
4. Caisson ring segment
5. Open annulus
6. Solid caisson ring
7. Slips on concrete

MULTI-MODAL CORRIDORS · MMC-DWG-001-04 · EXPANSION PACKER

Schematic — not to scale unless dimensioned · Patents P1, P2
Rev D · 10 Nov 2026 · BB (Boh Brett) Murrell

MMC-DWG-001-05 · TENSION TUBULAR

ATS COMPONENT SHEET 5 · SUMMARY · JOINT · STRING IN THE STRUCTURE · IN SERVICE

A · THREADED JOINT

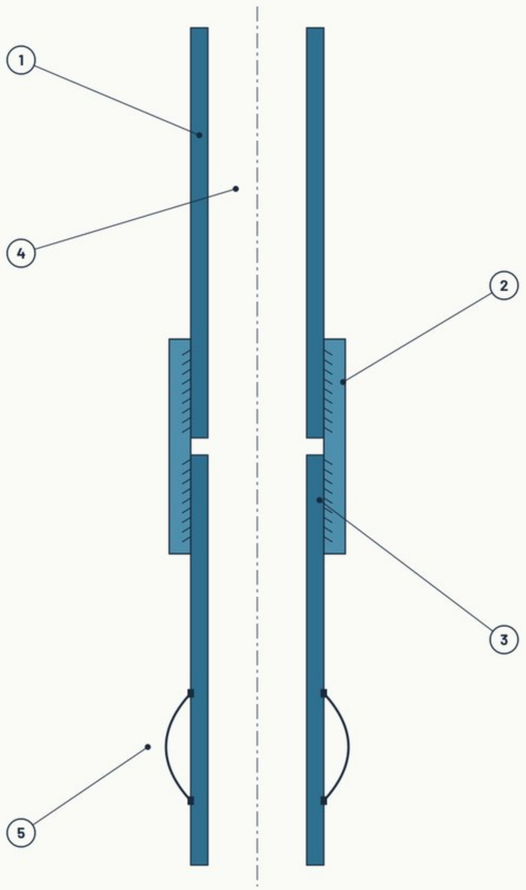

Oilfield-standard threaded connection; made up at the top of the structure.

B · PYLON CAP TO CUTTER HEAD

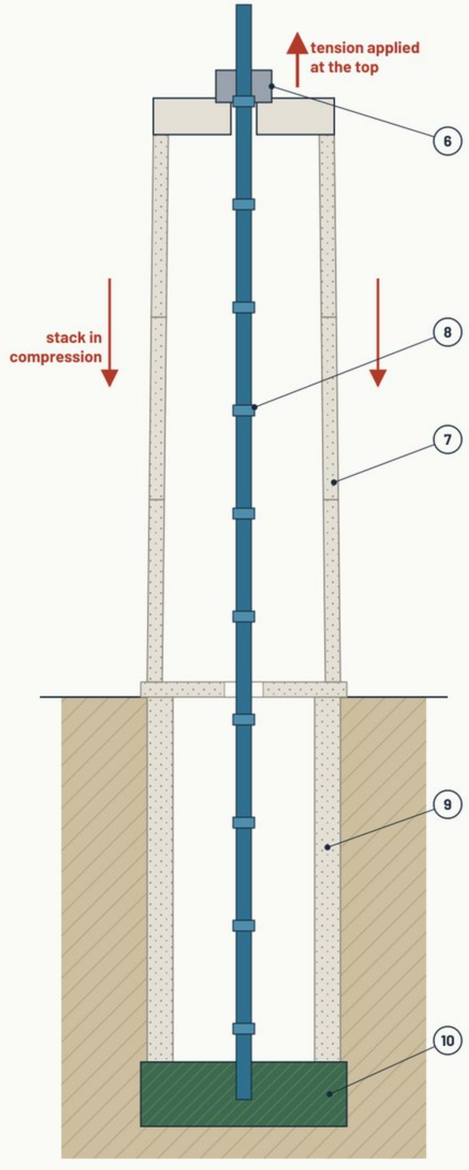

C · IN SERVICE

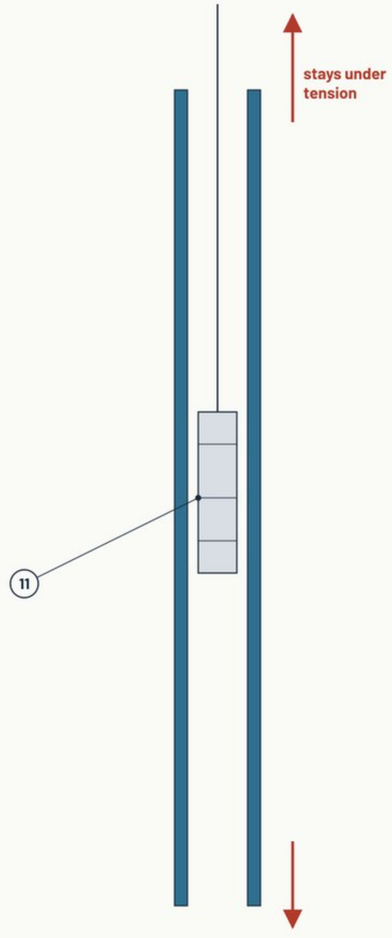

Inspected in place while in service. Can be withdrawn at the pylon cap, inspected at the surface, re-run or replaced, and re-tensioned.

SUMMARY

TENSION TUBULAR

- A single steel tubular from the pylon cap to the cutter head, running in the coaxial passage of every pylon joint and the caisson.
- Made up from ~12 m sections of oilfield-standard casing, joined by threaded couplings and lowered through the stack.
- Latches into the cutter head at the bottom; tension is applied and locked at the pylon cap, putting the stack into compression.
- Centralisers keep it in the middle of the passage.
- Renewable: inspected in place, or withdrawn, re-tensioned or replaced over its life.

PATENTS P4

CALLOUTS

1. Tubular section (~12 m)
2. Threaded coupling
3. Pin thread on each section end
4. Coaxial bore: open full length
5. Centraliser: keeps the tubular centred in the passage
6. Tension lock (see sheet 06)
7. Hollow pylon joints (section): 4 m base on the caisson, slight taper
8. Tubular joints
9. Caisson
10. Cutter head (anchor latch)
11. Logging tool on wireline: caliper, ultrasonic, magnetic flux, video

Tension tubular · Coupling · Precast concrete · Tension lock · Cutter head · Inspection tool · Loads

MULTI-MODAL CORRIDORS · MMC-DWG-001-05 · TENSION TUBULAR

Schematic — not to scale unless dimensioned · Patent P4
Rev E · 12 Nov 2026 · BB (Boh Brett) Murrell

MMC-DWG-001-06 · TENSION LOCK

ATS COMPONENT SHEET 6 · SUMMARY · AT THE PYLON CAP · FOUR STATES: RAM ON · PULL · SET SLIPS · RAM OFF

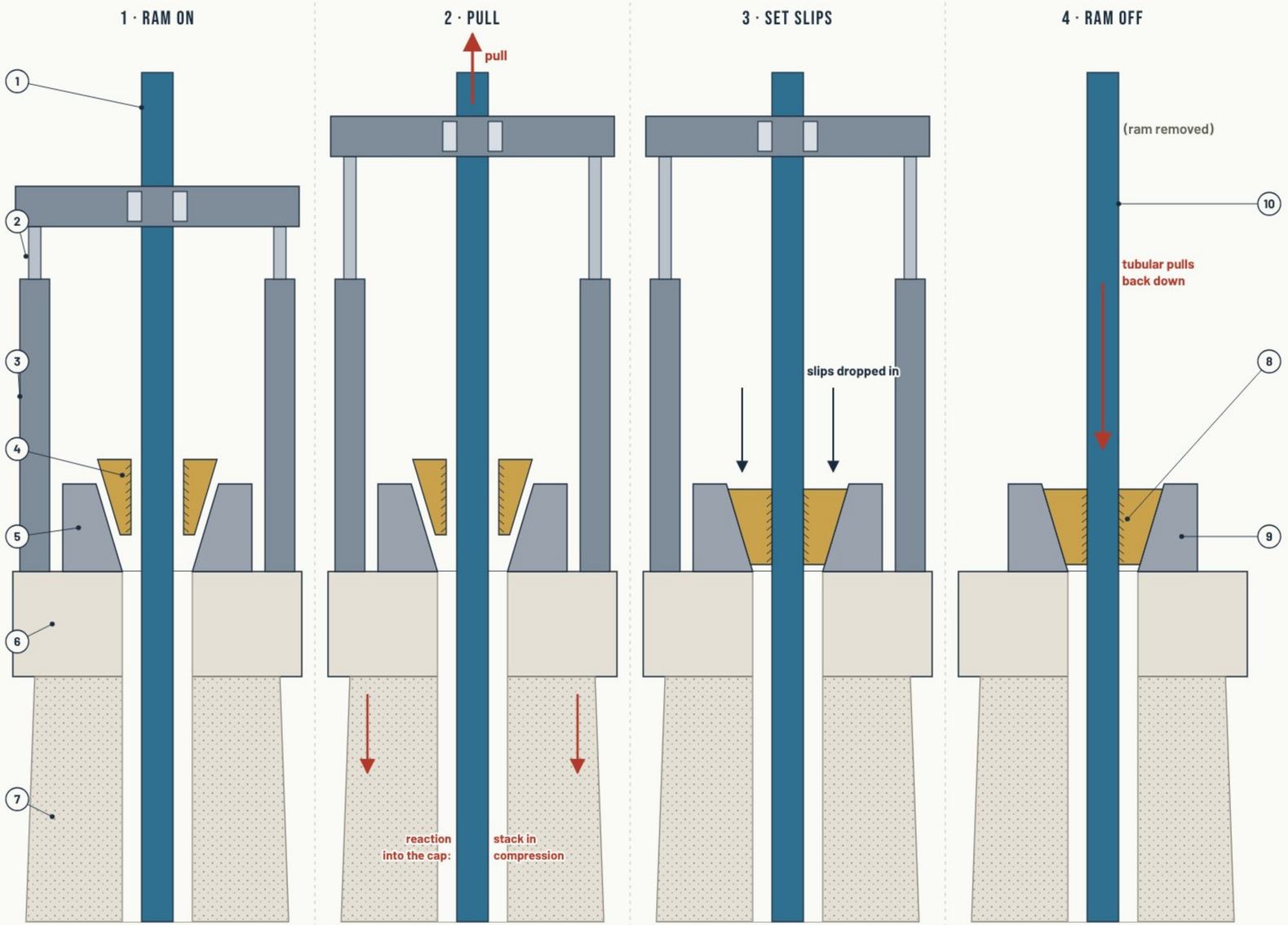

Ram frame stands on the cap. Crosshead grips the tubular. Slips held open in the bowl.

Ram strokes up: the tubular is pulled to the design tension.

Holding the load, the slips are set: teeth bite the steel.

Ram released: the slips wedge tighter in the bowl and hold the tension in the tubular.

Tension tubular · Slips · Slip bowl · Hydraulic ram · Gripping slips (tool) · Precast concrete · Loads

SUMMARY

TENSION LOCK

- Two parts at the pylon cap: a hydraulic ram that pulls the tubular, and a slip lock that holds it.
- The ram grips the tubular and pulls; its reaction bears on the pylon cap, putting the stack into compression.
- With the load held, wedge slips are set in a tapered bowl on the cap; their teeth bite the steel tubular.
- When the ram is released the tubular pulls back down, the slips wedge tighter, and the tension is locked in.
- The ram is removed. It is refitted to re-tension, or to lift the slips so the tubular can be withdrawn.

PATENTS P1 · P2

CALLOUTS

1. Tension tubular
2. Crosshead with gripping slips
3. Hydraulic ram
4. Slips (open)
5. Slip bowl
6. Pylon cap
7. Pylon segment
8. Slips set: wedge between tubular and bowl
9. Bowl bears on the pylon cap
10. Tubular held in tension

MULTI-MODAL CORRIDORS · MMC-DWG-001-06 · TENSION LOCK

Schematic — not to scale unless dimensioned · Patents P1, P2
Rev D · 21 Nov 2026 · BB (Boh Brett) Murrell

MMC-DWG-001-07 · PYLON JOINT

ATS COMPONENT SHEET 7 · SUMMARY · PYLON JOINT · PIN-AND-BOX CONNECTION · STACKED TAPER

A · ONE PYLON JOINT

SECTION

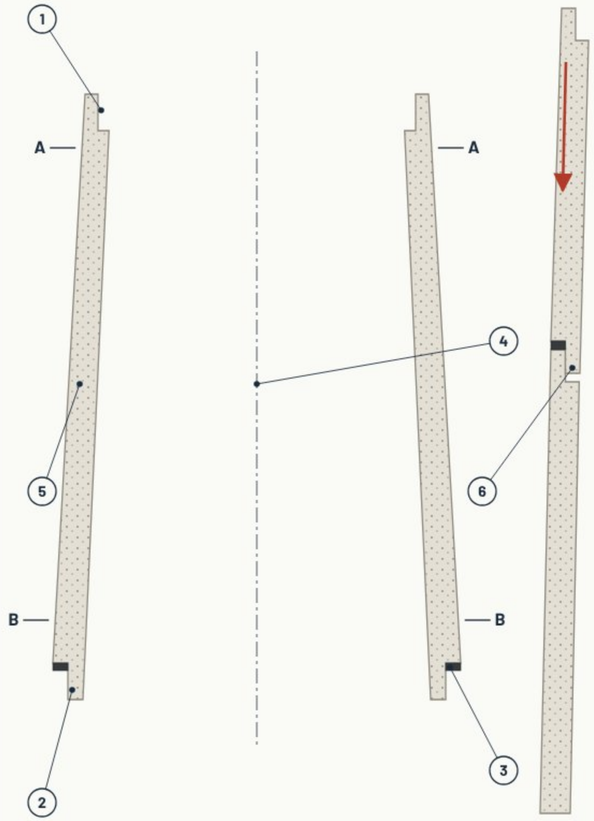

One module from the pylon joint family; stacked dry to the height required.

B · PIN-AND-BOX CONNECTION

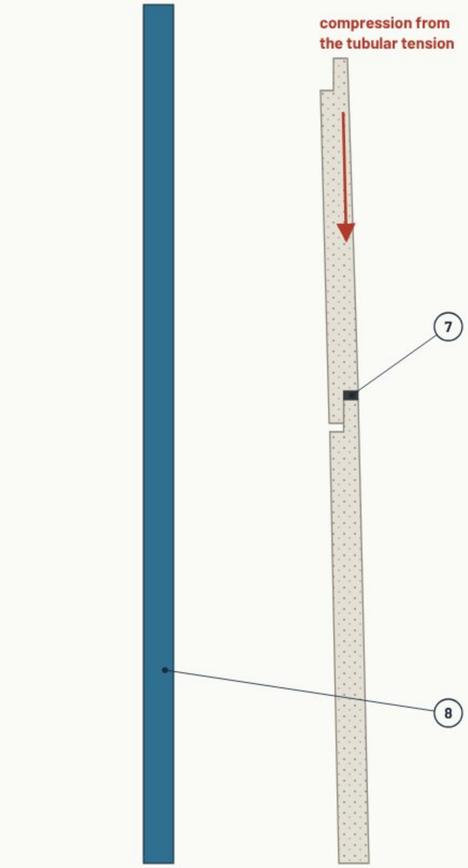

No bolts or welds: the tension holds the connection closed; the spigot aligns it.

C · STACKED: CONNECTIONS

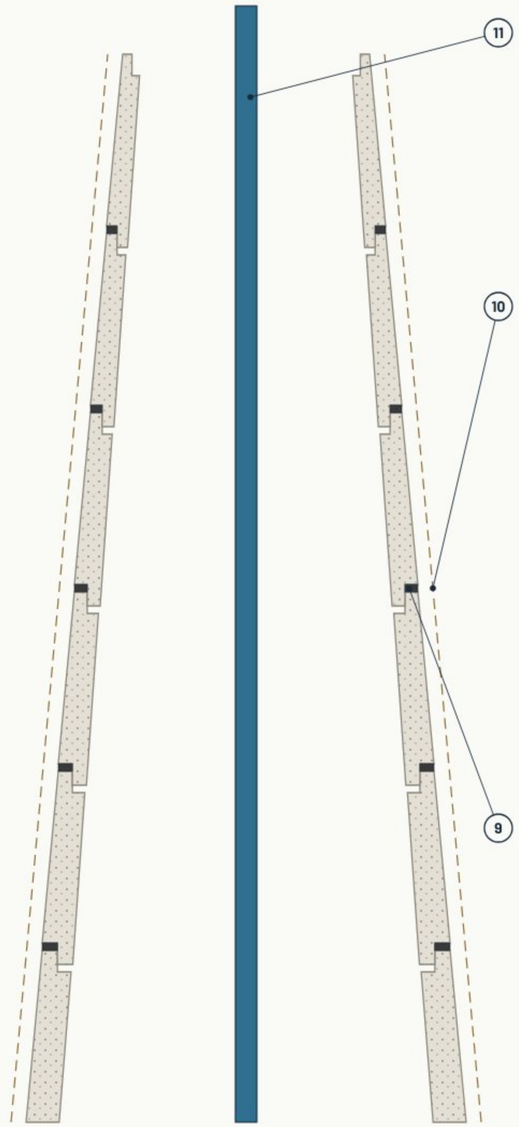

Each pylon joint's top matches the base of the one above, so the stack tapers.

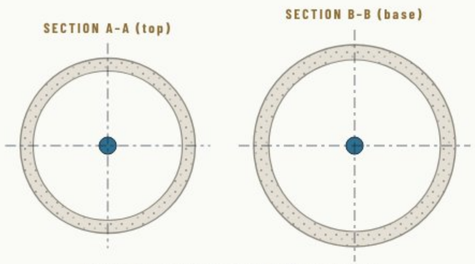

Hollow ring section; tubular in the open core

Precast concrete · Dampening layer · Tension tubular · Loads

SUMMARY

PYLON JOINT

- The pylon: hollow precast concrete, tapered (300 mm wall at the 4 m base). Pylon joints stack dry to the height each pole or tower needs.
- Pin-and-box connections in the wall (spigot into socket) locate each pylon joint on the one below, with a dampening layer at the connection.
- The tension tubular runs up the open core of every pylon joint.
- The tensioned tubular compression-locks the stack into one structural unit: no bolts or welds.
- Each pylon joint's top matches the base of the next, so the stacked pylon joints form one continuous taper.

PATENTS P4

CALLOUTS

1. Socket (box): top of the wall
2. Spigot (pin): bottom of the wall
3. Dampening layer
4. Open core: tubular runs here
5. Precast wall, tapered
6. Spigot seated in socket: lateral alignment
7. Dampening layer
8. Tension tubular in the open core
9. Connection: spigot-and-socket + dampening layer
10. One continuous taper
11. Tension tubular

MULTI-MODAL CORRIDORS · MMC-DWG-001-07 · PYLON JOINT

Schematic — not to scale unless dimensioned · Patent P4
Rev E · 21 Nov 2026 · BB (Boh Brett) Murrell

MMC-DWG-001-08 · CAISSON HEAD

ATS COMPONENT SHEET 8 · SUMMARY · THE PART · IN PLACE ON THE CAISSON

A · THE PART

SECTION

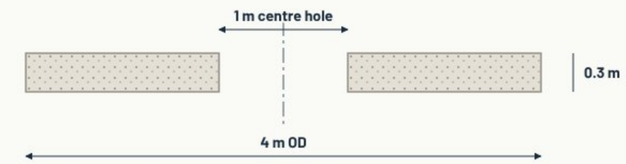

PLAN

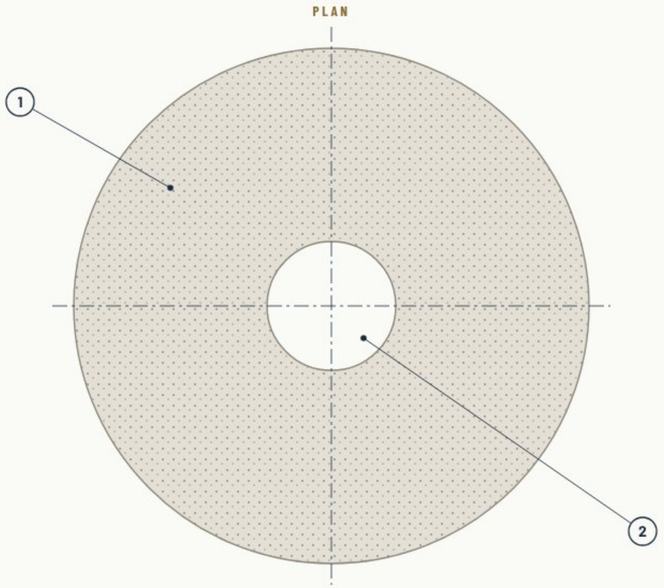

One unit per foundation, ~8.5 t.

B · IN PLACE

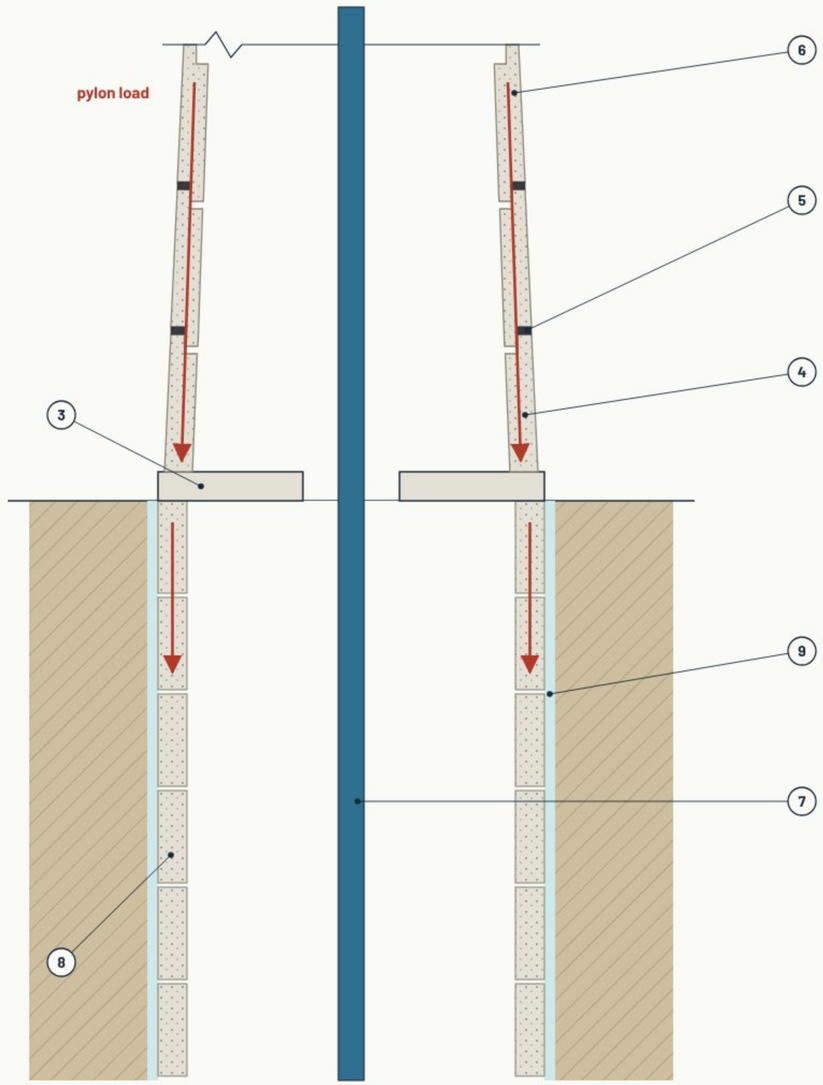

SUMMARY

CAISSON HEAD

- Precast concrete "donut": 4 m outside diameter, 1 m centre hole, 0.3 m thick.
- Sits as a lid on top of the caisson ring stack, at ground level.
- The first pylon segment bears on it; it spreads the pylon load into the caisson rings.
- The tension tubular passes through the centre hole, from the caisson into the pylon stack.
- One standard unit for every foundation, produced at Hub or Spoke plants.

PATENTS P1 · P2 · P7

CALLOUTS

1. Precast concrete "donut"
2. Centre hole: tubular passage
3. Caisson head: lid on the caisson
4. First pylon segment bears on the head
5. Connection
6. Hollow pylon segments
7. Tension tubular
8. Caisson rings
9. Grout (optional)

Precast concrete · Dampening layer · Tension tubular · Grout · Loads

MULTI-MODAL CORRIDORS · MMC-DWG-001-08 · CAISSON HEAD

Schematic — not to scale unless dimensioned · Patents P1, P2, P7
Rev E · 21 Nov 2026 · BB (Boh Brett) Murrell

MMC-DWG-001-09 · PYLON CAP

ATS COMPONENT SHEET 9 · SUMMARY · THE PART · ON TOP OF THE PYLON JOINT STACK

A · THE PART

SECTION

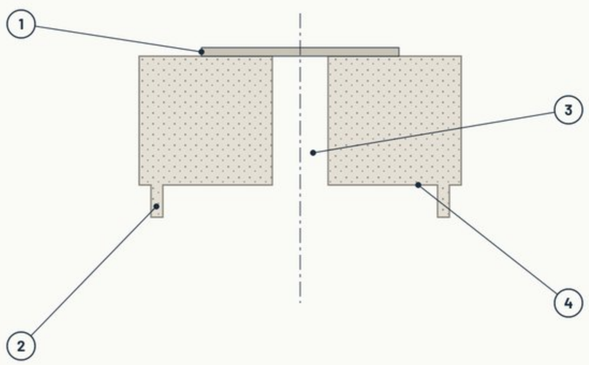

PLAN

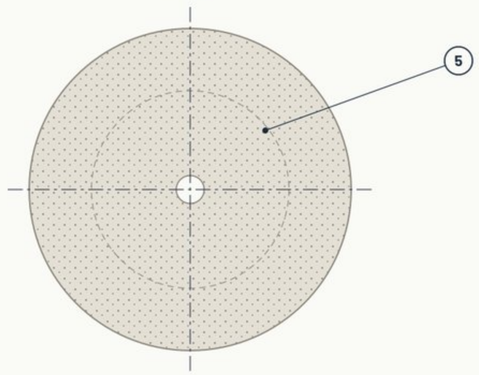

Placed last on the dry-assembled stack.
~1.9 t (MMC-VB/VC module table).

B · ON TOP OF THE PYLON JOINT STACK

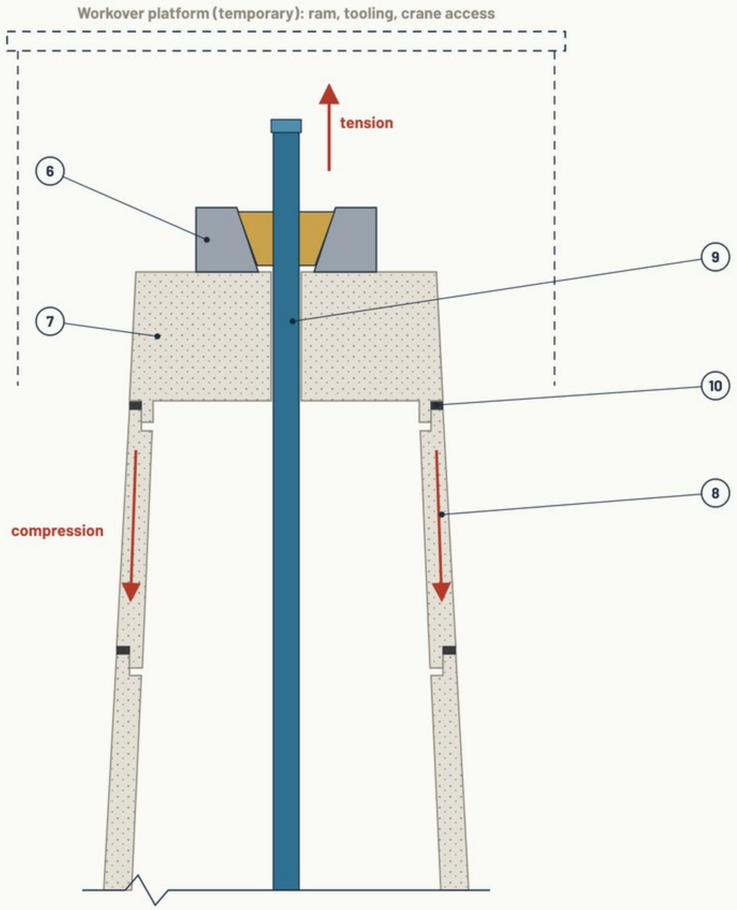

SUMMARY

PYLON CAP

- Precast concrete cap, placed last on top of the pylon joint stack.
- A solid lid on the hollow pylon; a spigot ring seats in the top pylon joint's socket.
- The tubular ends here. The tension lock's slip bowl sits on the cap, so the cap carries the tension into the stack as compression.
- Tensioning, re-tensioning and tubular withdrawal are all done at the cap, from a workover platform lifted to the top.
- Variants can carry top-mounted antennas.

PATENTS P2 · P4

CALLOUTS

1. Bearing face for the slip bowl
2. Spigot ring: seats in the top pylon joint's socket
3. Tubular passage
4. Precast concrete
5. Slip bowl footprint
6. Tension lock: bowl + slips
7. Pylon cap
8. Top pylon joints (hollow)
9. Tubular end
10. Connection

Precast concrete · Dampening layer · Tension tubular · Slip bowl · Slips · Loads

MULTI-MODAL CORRIDORS · MMC-DWG-001-09 · PYLON CAP

Schematic — not to scale unless dimensioned · Patents P2, P4
Rev D · 12 Nov 2026 · BB (Boh Brett) Murrell

MMC-DWG-001-10 · CENTRALISERS AND INSERT PACKER

ATS COMPONENT SHEET 10 · SUMMARY · CENTRALISER · ANCHOR CENTRALISER · INSERT PACKER (CONTINGENCY ANCHOR)

A · CENTRALISER

IN THE HOLLOW PYLON

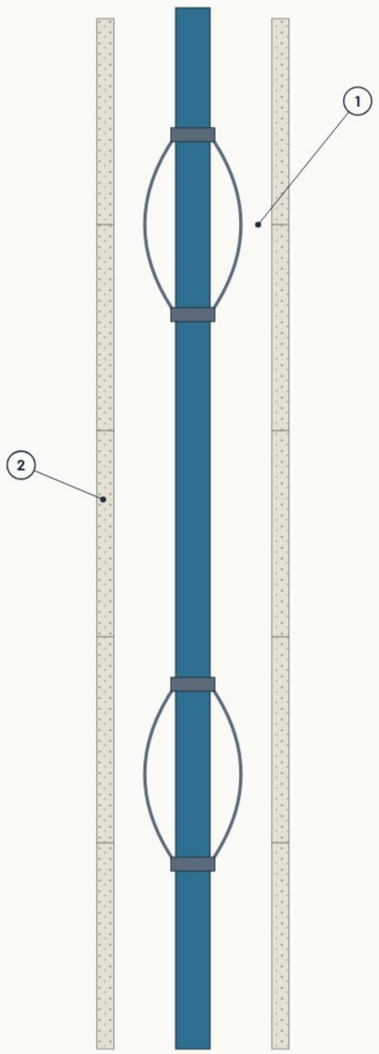

Bow springs keep the tubular centred while it is run in.

B · ANCHOR CENTRALISER

ABOVE THE ANCHOR LATCH

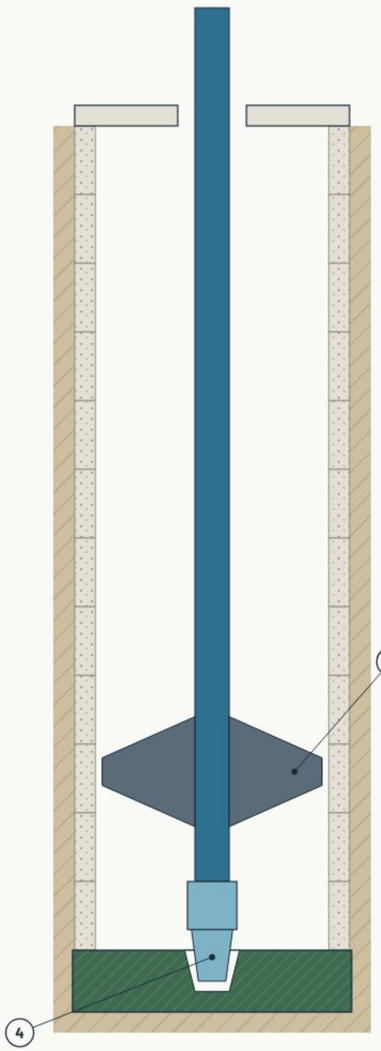

Rigid fins line the latch up with the receptacle below.

C · INSERT PACKER: RUN IN

SMALL OD THROUGH THE TUBULAR HOLE

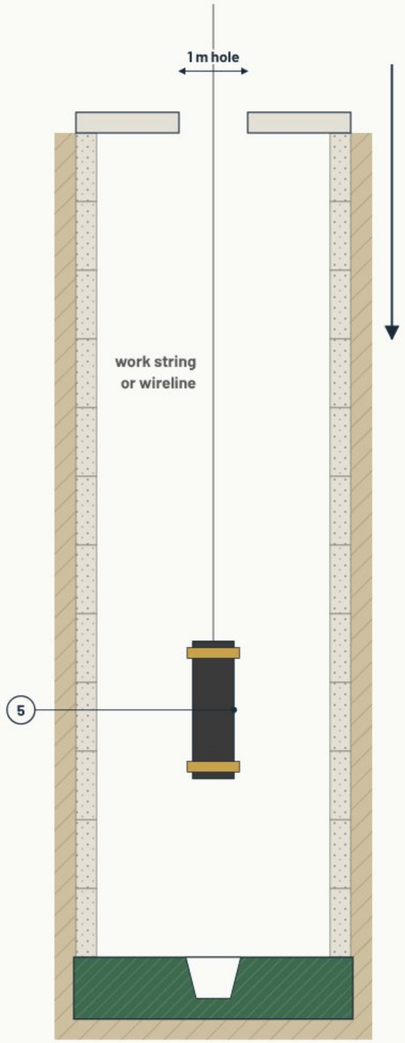

Passes the 1 m hole in the caisson head and the beam holes above.

D · SET: CONTINGENCY ANCHOR

PRIMARY RECEPTACLE DAMAGED

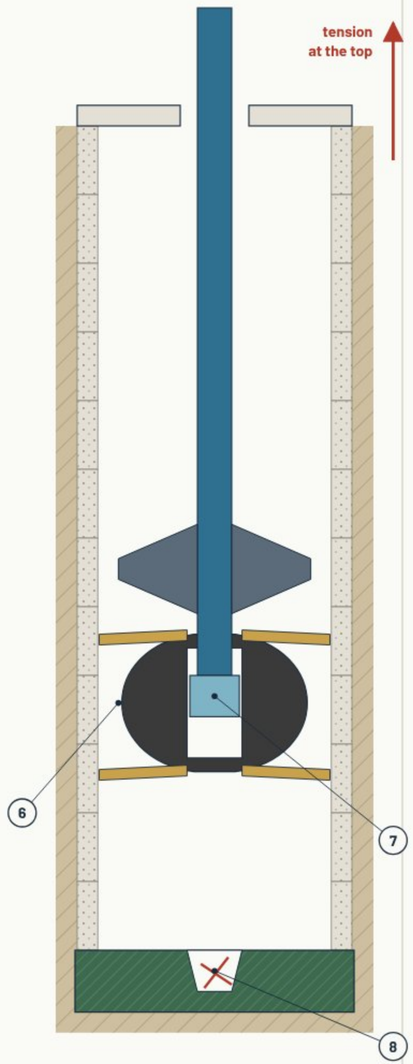

Large expansion grips the caisson; the anchor latches inside it.

Tension tubular · Anchor latch · Centraliser · Packer element · Slips · Precast concrete · Cutter head · Damage / tension

SUMMARY

CENTRALISERS AND INSERT PACKER

- Centraliser: bow springs clamped on the tubular keep it centred and off the walls while it is run in.
- Anchor centraliser: rigid fins just above the anchor latch line it up with the receptacle so it engages square.
- Insert packer: small outside diameter, so it runs through the tension-tubular hole; large expansion, so it grips the caisson wall when set. Run on a work string or wireline.
- Contingency anchor: if the primary receptacle in the cutter head is damaged, the insert packer is set above it and the tubular's anchor latches inside the packer. Tension is pulled from the top as normal.

PATENTS P1 · P2

CALLOUTS

1. Centraliser (bow spring)
2. Hollow pylon
3. Anchor centraliser
4. Latch in the receptacle
5. Insert packer, run in
6. Insert packer, set
7. Anchor latched in the packer
8. Damaged primary receptacle

MULTI-MODAL CORRIDORS · MMC-DWG-001-10 · CENTRALISERS AND INSERT PACKER

Schematic — not to scale unless dimensioned · Patents P1, P2
Rev C · 21 Nov 2026 · BB (Boh Brett) Murrell

MMC-DWG-002-01 · MMC-VC VIADUCT

TOPSIDE SHEET 1 · SUMMARY · SINGLE LEG · SINGLE DECK (6 M STANDARD, 6–150 M+ BY TERRAIN)

A · CROSS-SECTION

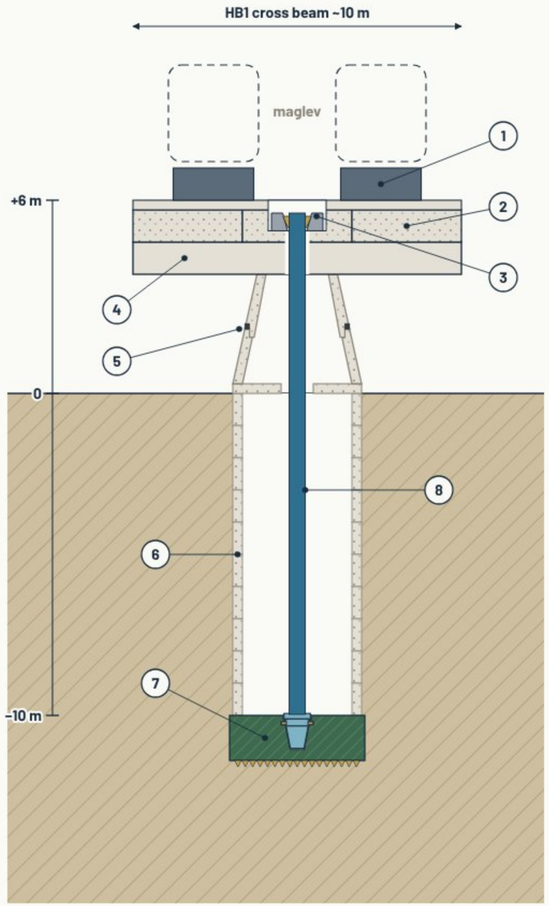

B · SIDE ELEVATION (SAME SCALE)

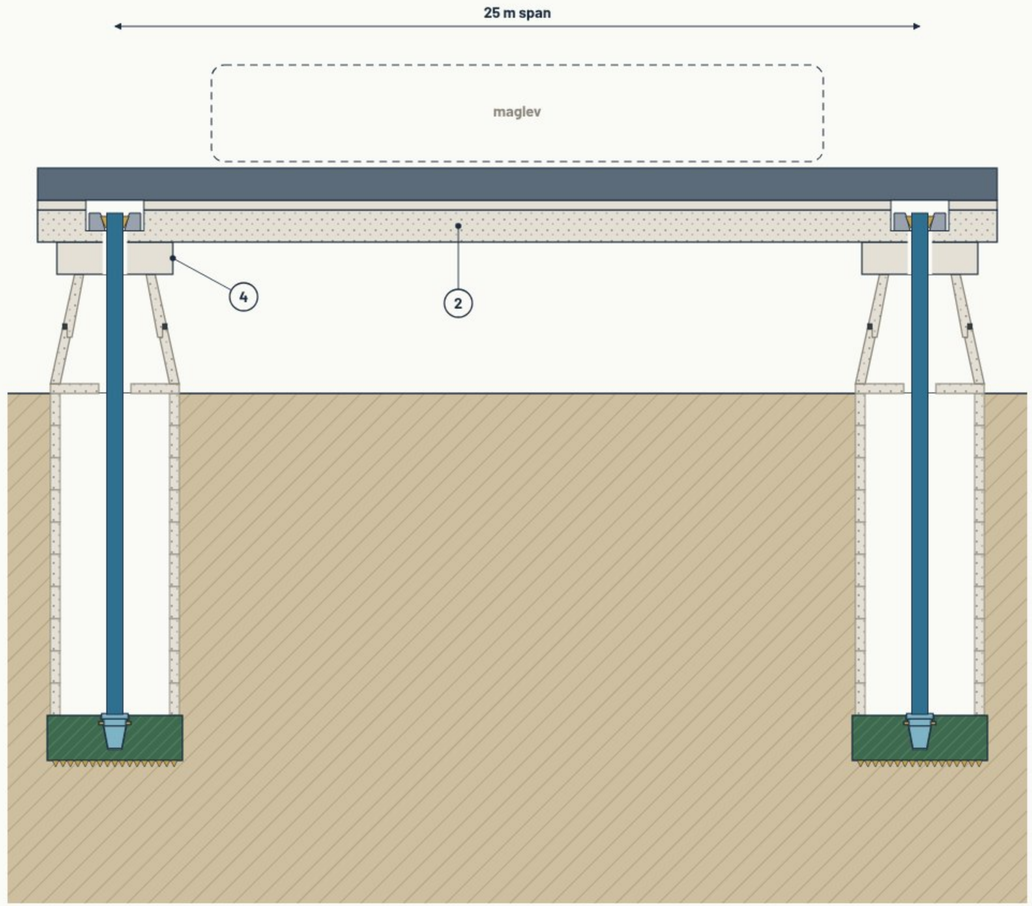

Standard 6 m shown. The same pylon joints stack to 20–70 m on ridges and 150 m+ at valleys.

SUMMARY

MMC-VC

- Single leg, single deck: the lightest viaduct in the MMC family. Standard deck height 6 m.
- One 4 m ATS caisson (~10 m deep). One tension tubular, latched in the cutter head and held by slips in a pocket in the centre longitudinal beam.
- The HB1 cross beam (~10 m) carries three longitudinal beams laid flush. The tubular passes through holes in the cross beam and the centre beam.
- Two maglev guideways sit either side of the centre pocket, clear of the tubular.
- Pylon joints stack from 6 m to 150 m+ to suit the terrain; every pylon 4 m at the base to 2.5 m at the top (detailed design).
- The Newcastle–Sydney maglev (Phase 0-2) runs on MMC-VC.

PATENTS P5 (topside) · P1–P4 (foundation, stack)

CALLOUTS

1. Maglev guideways (2)
2. Longitudinal beams, 3 flush
3. Slips in centre beam pocket
4. HB1 cross beam
5. Pylon (hollow)
6. ATS caisson, 4 m OD, ~10 m
7. Cutter head, tubular latched
8. Tension tubular

Precast concrete · Tension tubular · Slip bowl · Slips / inserts · Guideway · Cutter head

MULTI-MODAL CORRIDORS · MMC-DWG-002-01 · MMC-VC VIADUCT

Schematic — not to scale unless dimensioned · Patents P1–P5
Rev F · 21 Nov 2026 · BB (Boh Brett) Murrell

MMC-DWG-002-02 · MMC-VB VIADUCT

TOPSIDE SHEET 2 · SUMMARY · TWO LEGS · 6 M PYLON UNDER THE FREIGHT BEAMS · MAGLEV 19 M · PHASE 0 STANDARD

A · CROSS-SECTION

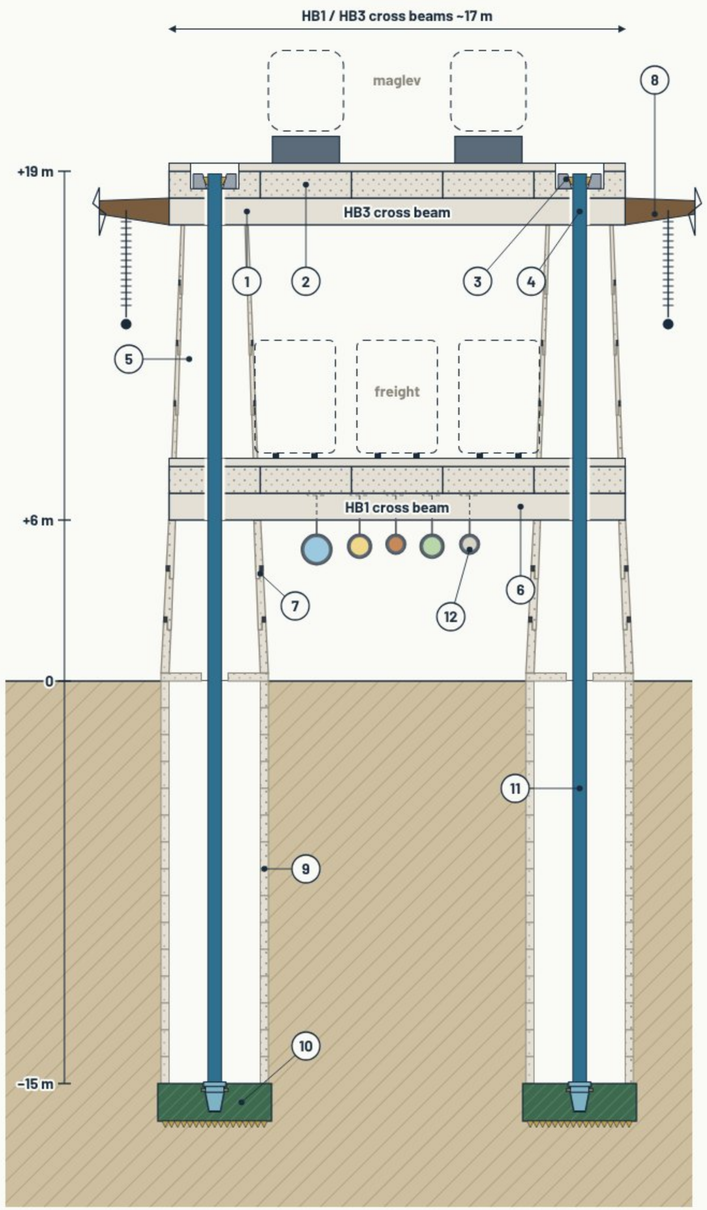

B · SIDE ELEVATION (SAME SCALE)

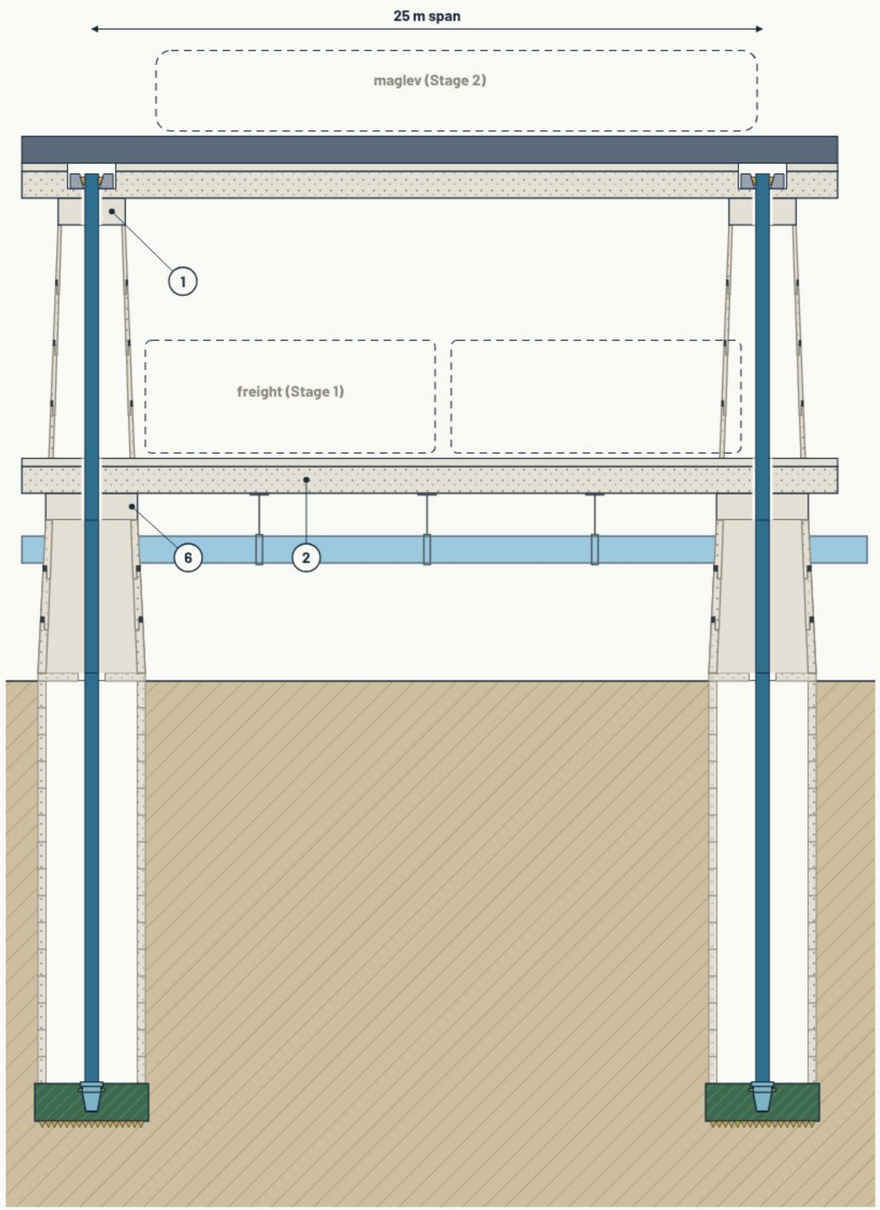

Near leg shown; the far leg stands 13.6 m behind it.

Precast concrete · Tension tubular · Slip bowl · Slips / inserts · Guideway · HVDC arm · Cutter head · Water · Gas · Liquid fuels · Hydrogen · Fibre

SUMMARY

MMC-VB

- The Phase 0 corridor standard: two legs at the outer edges, two decks. The freight beams sit on a 6 m pylon; maglev at 19 m. Legs 4 m at the base to 2.5 m at the top (detailed design).
- Two 4 m ATS caissons per pylon (~15 m deep). One tension tubular per leg, latched in the cutter head and held by tension slips set in a pocket in the upper longitudinal beam, clear of the maglev deck.
- At each deck a cross beam (HB1, HB3) carries five longitudinal beams laid flush across the full width. The legs sit under the outer beams (1 and 5); the tubulars pass through holes in those beams, which helps with the dampening, and the tension clamps the beams into the pylon.
- HB1 carries three freight tracks between the legs; HB3 carries the maglev deck and the HVDC arms, three conductors per side (sheet 006-06).
- Water, gas, liquid fuels, hydrogen and fibre hang side by side under the freight deck, each in a circular harness from a plate under the longitudinal beams (sheets 006-07 to 006-10). Option: hyperloop replaces maglev on the upper deck (006-02).
- Built in two stages: freight first, then maglev added above the running freight line.
- Melbourne–Brisbane Phase 0 (2,400 km) and the Hunter spur are built to MMC-VB.

PATENTS P5 (topside) · P1–P4 (foundation, stack)

CALLOUTS

1. HB3 maglev cross beam
2. Longitudinal beams, 5 per deck
3. Slips in upper beam pocket
4. Tubular through beam holes
5. P3/P4 upper pylon joints
6. HB1 freight cross beam
7. P1/P2 lower pylon joints
8. HVDC arm at HB3 (006-06)
9. ATS caisson, 4 m OD, ~15 m
10. Cutter head, tubular latched
11. Tension tubular
12. Pipes in harnesses (006-07 to 006-10)

MULTI-MODAL CORRIDORS · MMC-DWG-002-02 · MMC-VB VIADUCT

Schematic — not to scale unless dimensioned · Patents P1–P5
Rev I · 21 Nov 2026 · BB (Boh Brett) Murrell

MMC-DWG-002-03 · MMC-VA VIADUCT

TOPSIDE SHEET 3 · SUMMARY · TWO LEGS · FIVE LEVELS: FREIGHT 8 · AQUEDUCT 19 · SERVICES AND SERVICE RAIL 28 · HYPERLOOP 35 · MAGLEV 42 M

A · CROSS-SECTION

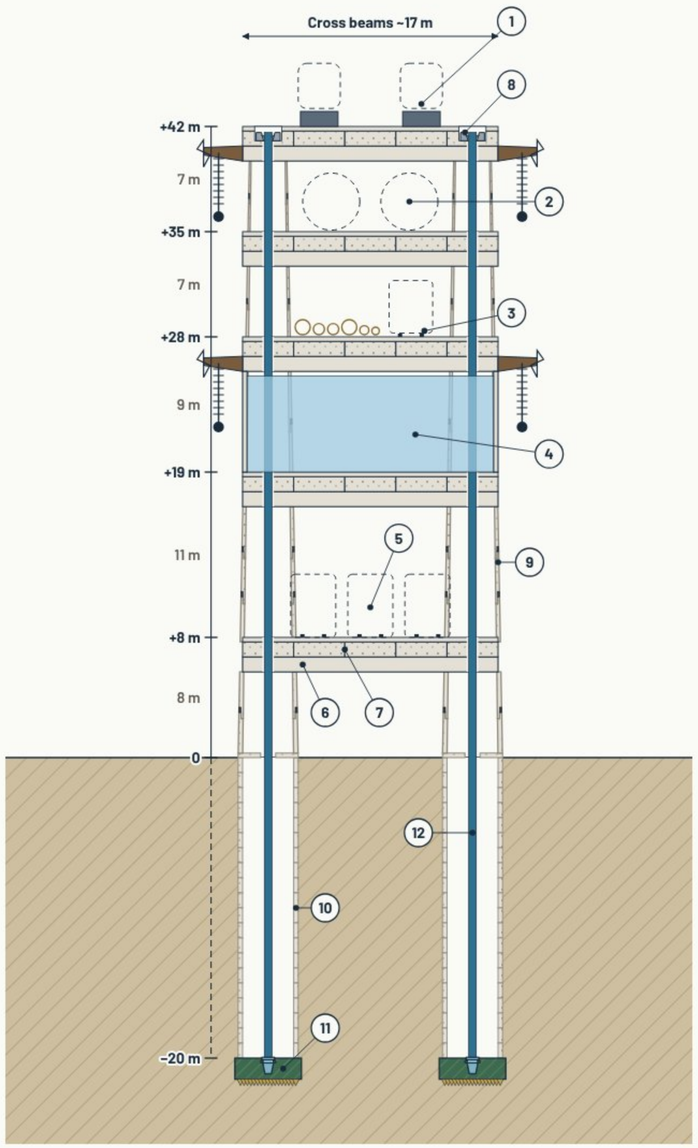

B · SIDE ELEVATION (SAME SCALE)

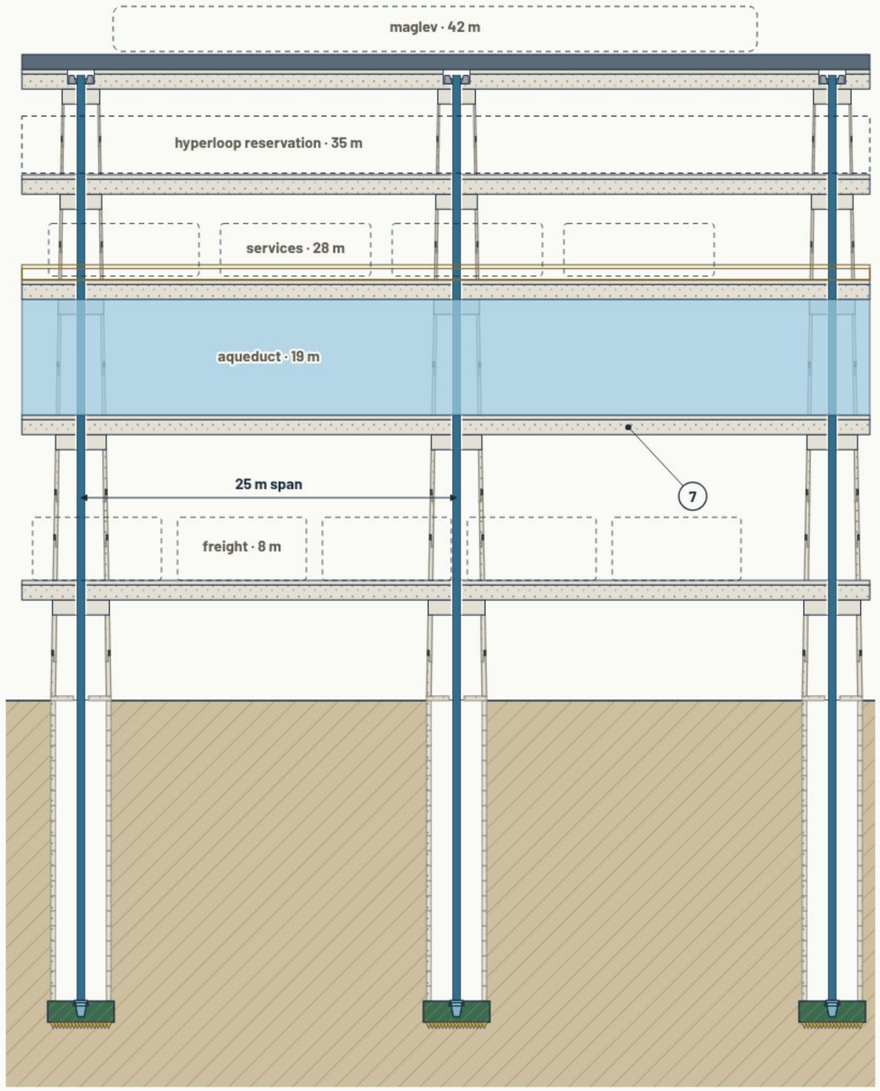

Near leg shown; the far leg stands 13.6 m behind it.

Precast concrete · Tension tubular · Water · Pipelines · Guideway · HVDC arm · Cutter head

SUMMARY

MMC-VA

- The continental standard: two legs at the outer edges, five levels. Freight 8 m, aqueduct 19 m, services and service rail 28 m, hyperloop reservation 35 m, maglev 42 m.
- Two 4 m ATS caissons per pylon (~20 m deep). One tubular per leg, from the cutter head to slips set in the top (maglev) beam.
- Every level has a cross beam (HB1–HB5) carrying five flush longitudinal beams. The tubular passes through holes in the outer beams at every level.
- The pylon joints taper from 4 m at the base to 2.5 m at the top, as on every MMC pylon; detailed design needed.
- The aqueduct chute fills the full width and height of its bay; the water load is the governing design case (site: ~4,250 t per span).
- HVDC arms at the level-3 and level-5 cross beams, three conductors per side per level (sheet 006-06).
- Phase 1–3 continental corridors are built to MMC-VA.

PATENTS P5 (topside) · P1–P4 (foundation, stack)

CALLOUTS

1. Maglev deck, slips in top beam
2. Hyperloop reservation (35 m)
3. Services: pipelines, service rail (28 m)
4. Aqueduct chute, full width and height
5. Freight, 3 tracks (8 m)
6. Cross beam, one per level
7. Longitudinal beams, 5 per level
8. Tension slips, top beam pocket
9. Pylon joints, 4 m to 2.5 m taper
10. ATS caisson, 4 m OD, ~20 m
11. Cutter head, tubular latched
12. Tubular through every level

MULTI-MODAL CORRIDORS · MMC-DWG-002-03 · MMC-VA VIADUCT

Schematic — not to scale unless dimensioned · Patents P1–P5
Rev H · 21 Nov 2026 · BB (Boh Brett) Murrell

MMC-DWG-002-08 · MMC-VD VIADUCT

TOPSIDE SHEET 8 · SUMMARY · TWO LEGS · THREE LEVELS: FREIGHT 8 · SERVICES 19 (SERVICE RAIL CENTRE, PIPES EITHER SIDE) · MAGLEV 26 M

C · SERVICES DECK LAYOUT OPTIONS (DETAILED DESIGN)

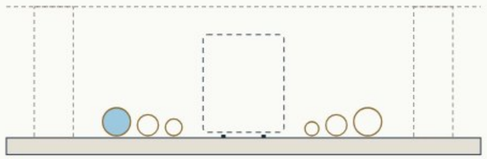

Option 1 · track in the centre, pipes either side (drawn in A)

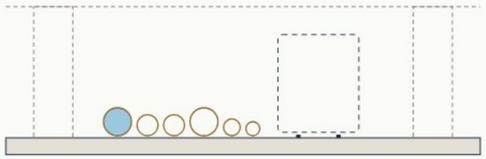

Option 2 · pipes to one side, track to the other (as MMC-VA)

Pipe sizes, spacing, walkways and clearances to the pylons: detailed design.

A · CROSS-SECTION

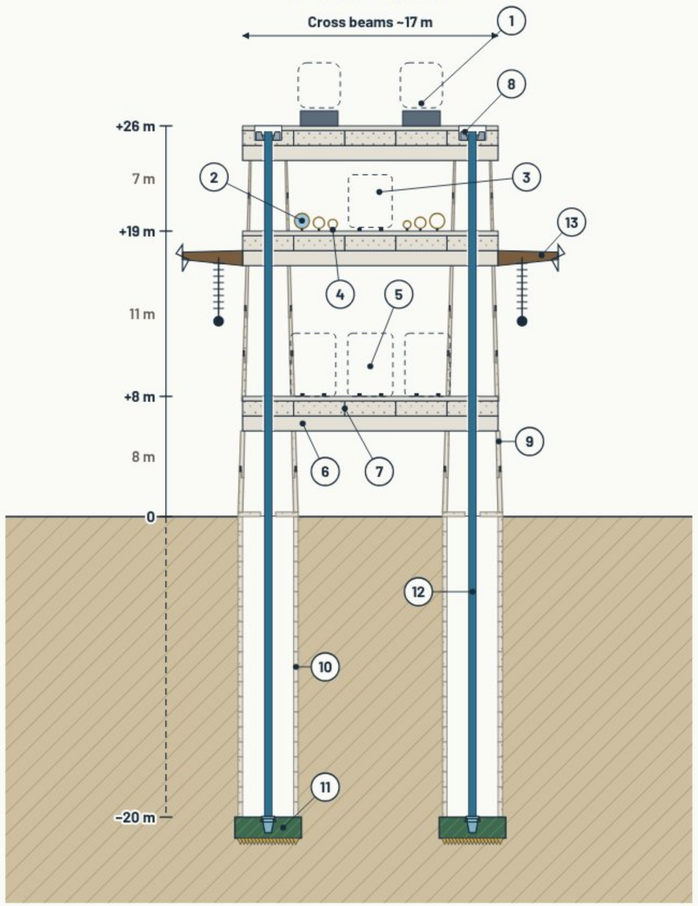

B · SIDE ELEVATION (SAME SCALE)

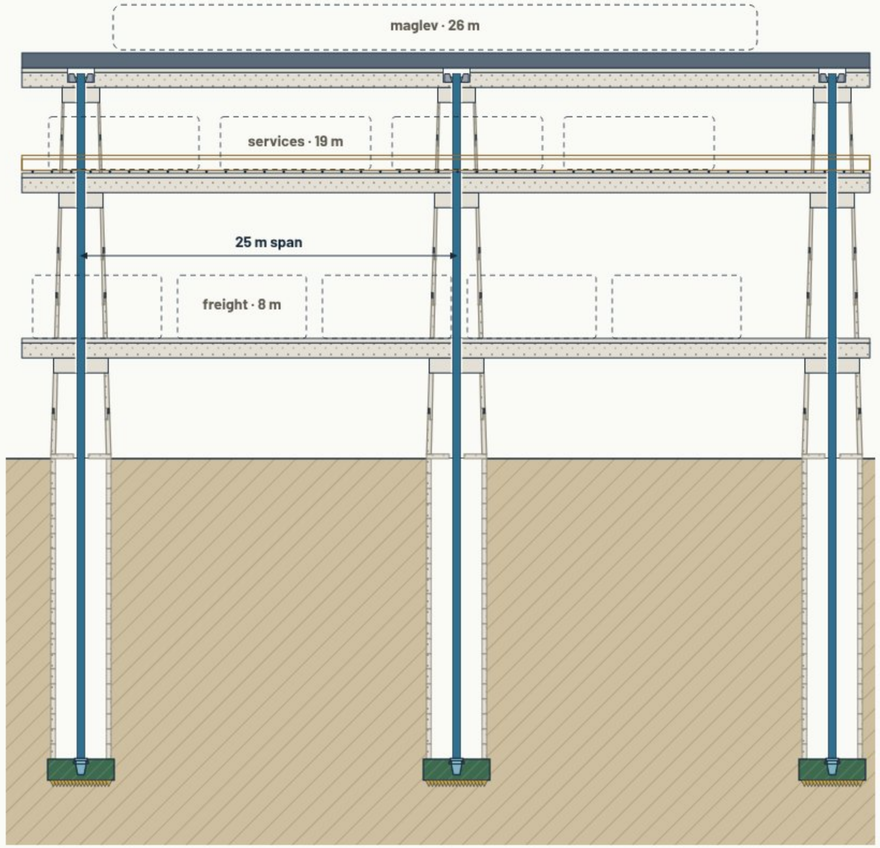

Near leg shown; the far leg stands 13.6 m behind it.

Precast concrete · Tension tubular · Water · Pipelines · Guideway · HVDC arm · Cutter head

SUMMARY

MMC-VD

- Three levels on two legs: freight 8 m, services deck with service rail 19 m, maglev 26 m. Top ~26.6 m.
- Same decks as the other models: the freight deck as MMC-VB, the services deck as MMC-VA level 3 (4.7 m clear, deck to beam), the maglev deck on top.
- Services deck layout options (view C): track in the centre with pipes either side (drawn), or pipes to one side and the track to the other, as on MMC-VA. Detailed design. Strings are welded on an assembly deck and moved along by drive rollers where needed.
- Freight keeps 8.7 m clear to the cross beam above for double-stack containers.
- HVDC arms at the level-2 cross beam, three conductors per side (sheet 006-06).
- Two ways to lay pipes: hung under the freight deck (MMC-VB) or on a services deck (MMC-VA, MMC-VD).
- One tubular per leg from the cutter head to slips in the top beam; pylons taper 4 m to 2.5 m. Sizes indicative; detailed design.

PATENTS P5 (topside) · P1–P4 (foundation, stack)

CALLOUTS

1. Maglev deck, slips in top beam
2. Pipes on rollers (6 lines)
3. Service rail, centre track, 4.7 m clear
4. Roller; drive rollers where needed
5. Freight, 3 tracks (8 m)
6. Cross beam, one per level
7. Longitudinal beams, 5 per level
8. Tension slips, top beam pocket
9. Pylon joints, 4 m to 2.5 m taper
10. ATS caisson, 4 m OD, ~20 m
11. Cutter head, tubular latched
12. Tubular through every level
13. HVDC arm, level-2 cross beam

MULTI-MODAL CORRIDORS · MMC-DWG-002-08 · MMC-VD VIADUCT

Schematic — not to scale unless dimensioned · Patents P1–P5
Rev B · 21 Nov 2026 · BB (Boh Brett) Murrell

MMC-DWG-002-04 · MMC-TB TRANSMISSION

TOPSIDE SHEET 4 · SUMMARY · SINGLE-LEG STANDARD TOWER · 4 M BASE TO 2.5 M TOP · ±500 KV HVDC SHOWN · OPTION: SECOND CROSS-ARM

A · TOWER ELEVATION

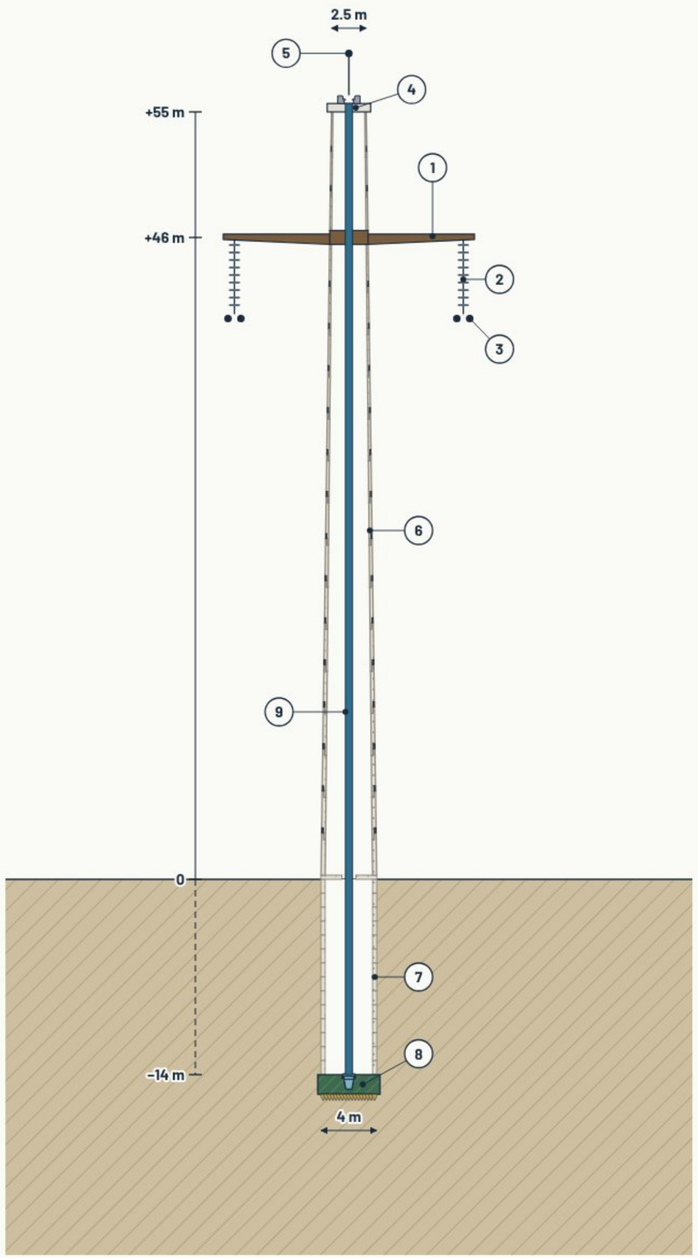

B · CROSS-ARM CONNECTION (ENLARGED)

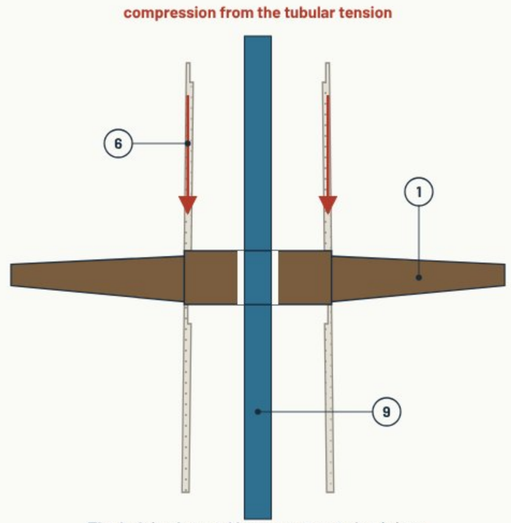

The hub is clamped between two pylon joints.
No bolts or welds; the tubular passes through the hub.

C · OPTION: SECOND CROSS-ARM

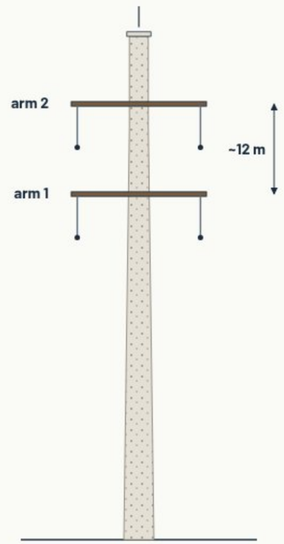

Pylon joints stacked ~12 m higher; arm 2 captured at a connection above arm 1.

Precast concrete · Tension tubular · Cross-arm · Insulators · Slip bowl · Cutter head · Loads

SUMMARY

MMC-TB

- The standard single-pylon transmission tower: about 80% of the network, 22 kV to ±500 kV HVDC.
- Hollow precast pylon, 4 m base to 2.5 m top, typically 50–60 m high. Detailed design needed.
- One 4 m ATS caisson (8–18 m by geology) and one 20" tension tubular, latched in the cutter head and locked at the pylon cap.
- Cross-arms are captured at connections, clamped between pylon joints by the tubular tension.
- Built in 1–2 days per tower with a single crane day.
- Option (view C): a second cross-arm captured at a connection ~12 m above the first, for a second circuit or bipole; the leg is stacked higher. Spacing indicative; detailed design.
- Towers 200 m apart: 5 per km.

PATENTS P6 (pole and tower) · P1–P4 (foundation, stack)

CALLOUTS

1. Cross-arm, hub captured
2. Insulator string
3. Conductor bundle
4. Pylon cap + tension lock
5. Earth wire peak
6. Hollow pylon, 4 m to 2.5 m
7. ATS caisson, 4 m OD
8. Cutter head, tubular latched
9. 20" tension tubular

MULTI-MODAL CORRIDORS · MMC-DWG-002-04 · MMC-TB TRANSMISSION

Schematic — not to scale unless dimensioned · Patents P1–P4, P6
Rev E · 21 Nov 2026 · BB (Boh Brett) Murrell

MMC-DWG-002-05 · MMC-TB GUYED

TOPSIDE SHEET 5 · SUMMARY · STANDARD MMC-TB TOWER + 3 GUY WIRES AT 70% HEIGHT · ANCHORS AT ~50 M RADIUS · OPTION: SECOND CROSS-ARM

A · ELEVATION

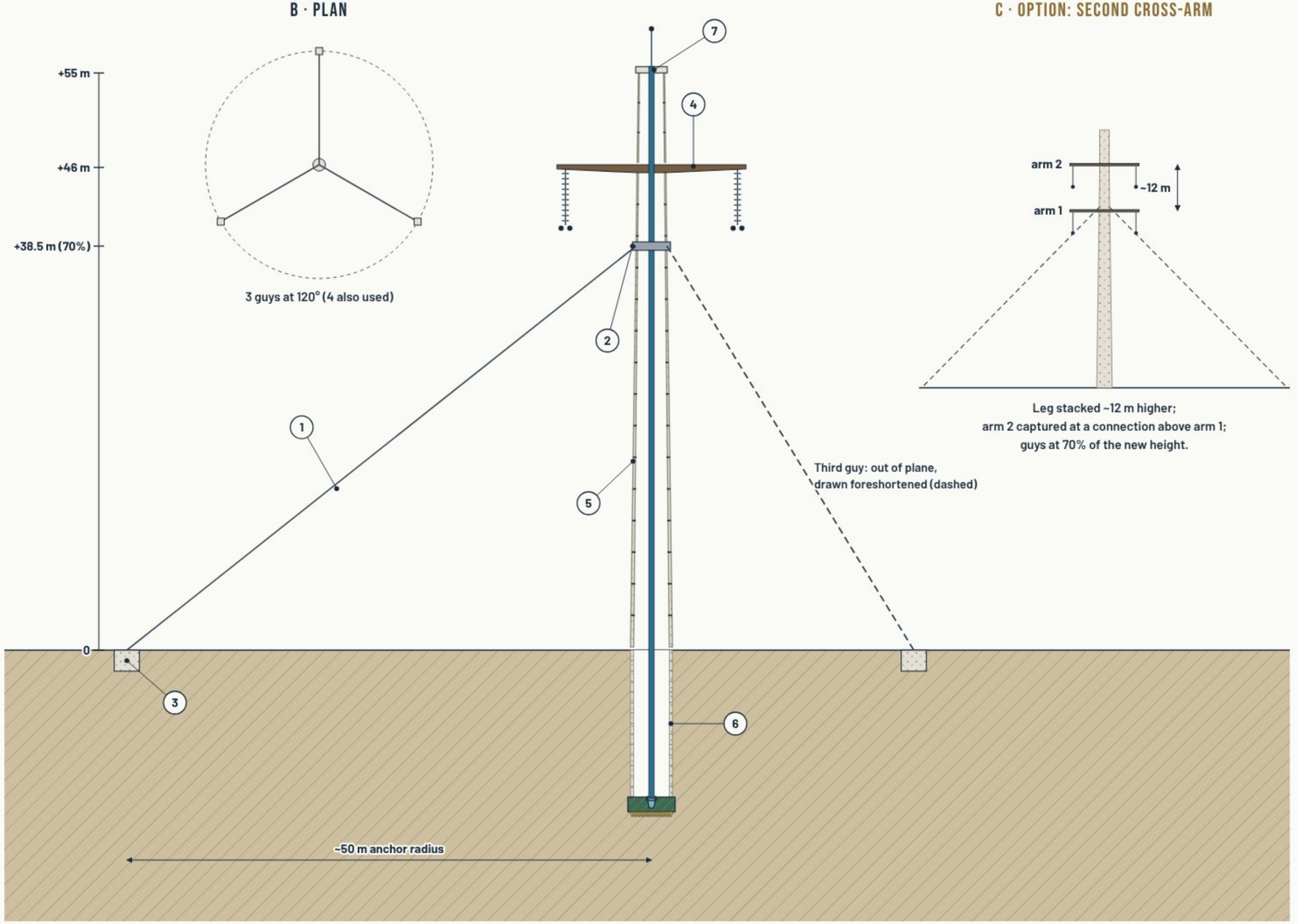

B · PLAN

3 guys at 120° (4 also used)

C · OPTION: SECOND CROSS-ARM

Leg stacked ~12 m higher;
arm 2 captured at a connection above arm 1;
guys at 70% of the new height.

SUMMARY

MMC-TB GUYED

- The standard MMC-TB tower, plus three (or four) guy wires from about 70% of its height to ground anchors about 50 m out.
- The guys take 60–80% of the lateral conductor load straight to ground, cutting the base bending moment by about 70%.
- The tubular tension needed drops to about 40% of the bare tower, so the standard 20" tubular covers ±500 kV HVDC strain.
- Needs a 50 m easement at the tower only, not along the corridor. For remote and outback corridors, mining and farm land.
- Pylon 4 m at the base to 2.5 m at the top; detailed design needed. Towers 200 m apart.
- Option (view C): a second cross-arm ~12 m above the first, for a second circuit or bipole. Spacing indicative; detailed design.

PATENTS P6 (pole and tower) · P1–P4 (foundation, stack)

CALLOUTS

1. Guy wire
2. Guy collar at 70% height
3. Ground anchor (indicative)
4. Cross-arm, hub captured
5. Hollow pylon, 4 m to 2.5 m
6. ATS caisson + cutter head
7. Pylon cap + tension lock

Precast concrete · Tension tubular · Guy wire · Guy collar · Cross-arm · Cutter head

MULTI-MODAL CORRIDORS · MMC-DWG-002-05 · MMC-TB GUYED

Schematic — not to scale unless dimensioned · Patents P1–P4, P6
Rev E · 21 Nov 2026 · BB (Boh Brett) Murrell

MMC-DWG-002-06 · MMC-TA PORTAL

TOPSIDE SHEET 6 · SUMMARY · DUAL-TOWER PORTAL · TWO STANDARD PYLONS ~13.5 M APART · ONE CROSS-BEAM AT 55 M · PORTALS 200 M APART

A · PORTAL ELEVATION

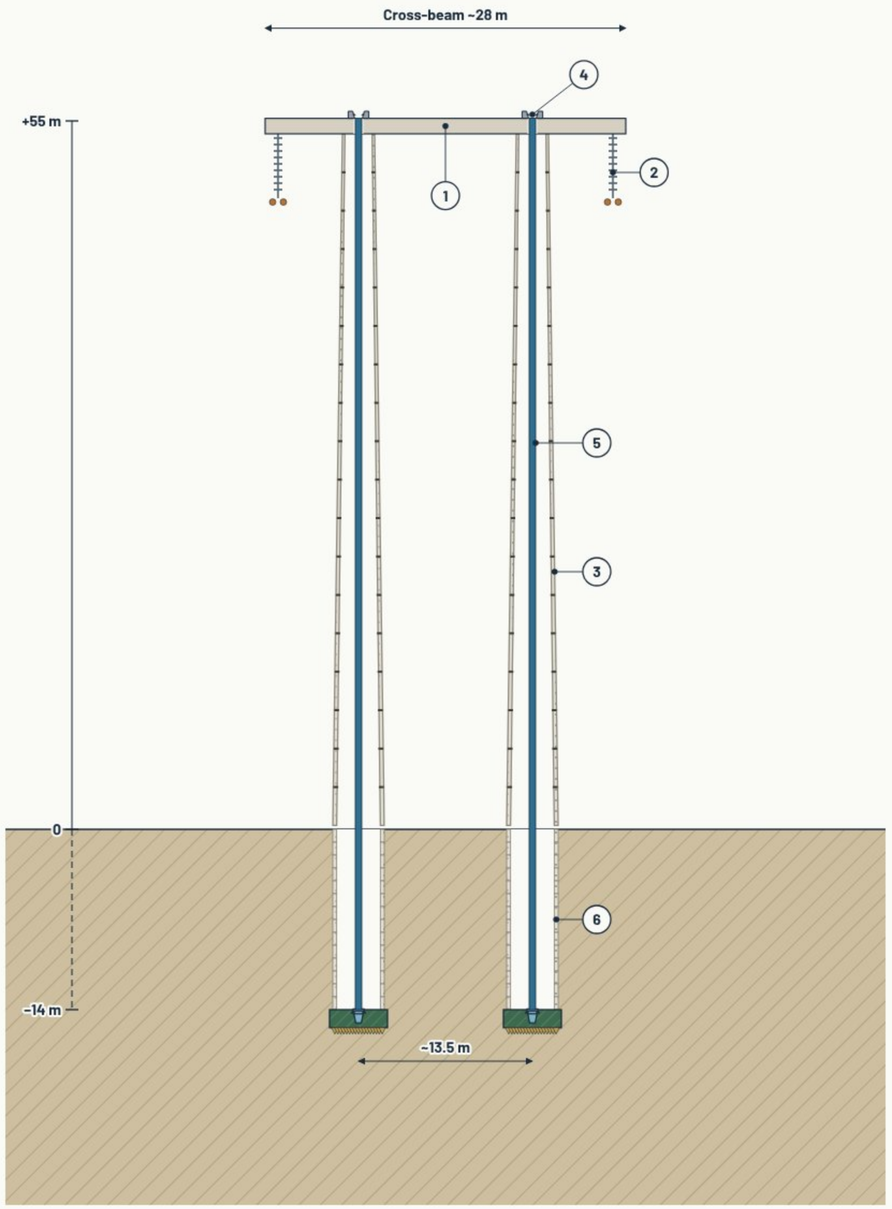

B · CROSS-BEAM ON THE TOP OF A PYLON

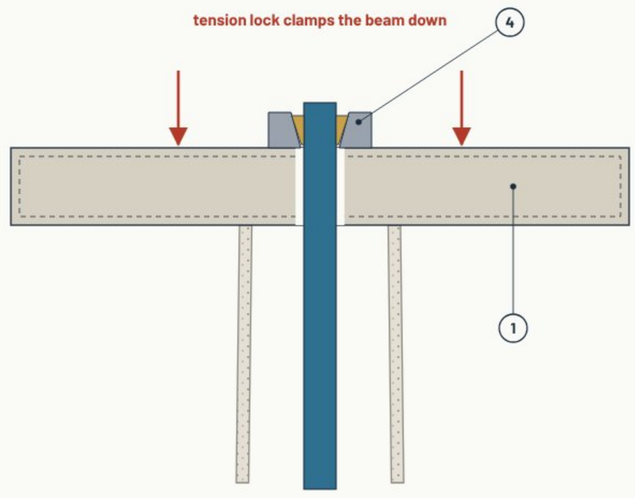

The cross-beam sits across the tops of both pylons;
the tubulars pass through holes in it and lock on top.

C · SIDE VIEW: THE NEXT PORTAL IS 200 M AWAY

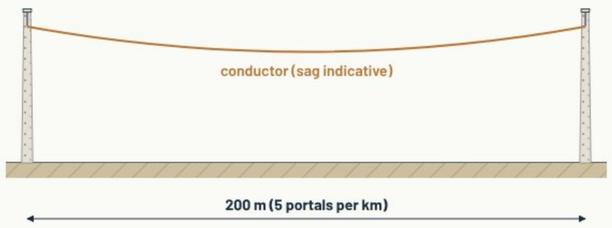

SUMMARY

MMC-TA

- Two standard MMC pylons, 55 m high and about 13.5 m apart, with one cross-beam across the top.
- The beam carries one HVDC bipole: one pole at each end, hung on insulator strings outboard of the pylons.
- Each pylon keeps its own 4 m ATS caisson and 20" tubular. The tubulars pass through the beam; the tension locks on top clamp it to both pylons.
- Pylons 4 m at the base to 2.5 m at the top; detailed design needed.
- The next portal is 200 m away: 5 portals per km.
- Earth wires, insulator length and conductor size: detailed design.

PATENTS P6 (pole and tower) · P1–P4 (foundation, stack)

CALLOUTS

1. Cross-beam (box girder), one, at the top
2. Insulators + pole conductor
3. Standard pylon, 4 m to 2.5 m
4. Tension lock on the beam
5. 20" tubular through the beam
6. ATS caisson + cutter head

Precast concrete · Cross-beam · Tension tubular · Insulators · Conductor · Slip bowl · Cutter head · Loads

MULTI-MODAL CORRIDORS · MMC-DWG-002-06 · MMC-TA PORTAL

Schematic — not to scale unless dimensioned · Patents P1–P4, P6
Rev D · 21 Nov 2026 · BB (Boh Brett) Murrell

MMC-DWG-002-07 · ACROSS TERRAIN

TOPSIDE SHEET 7 · SUMMARY · MMC-VC ON 25 M SPANS · EVERY PYLON 4 M AT THE BASE TO 2.5 M AT THE TOP · OPTION: ONE DIAMETER

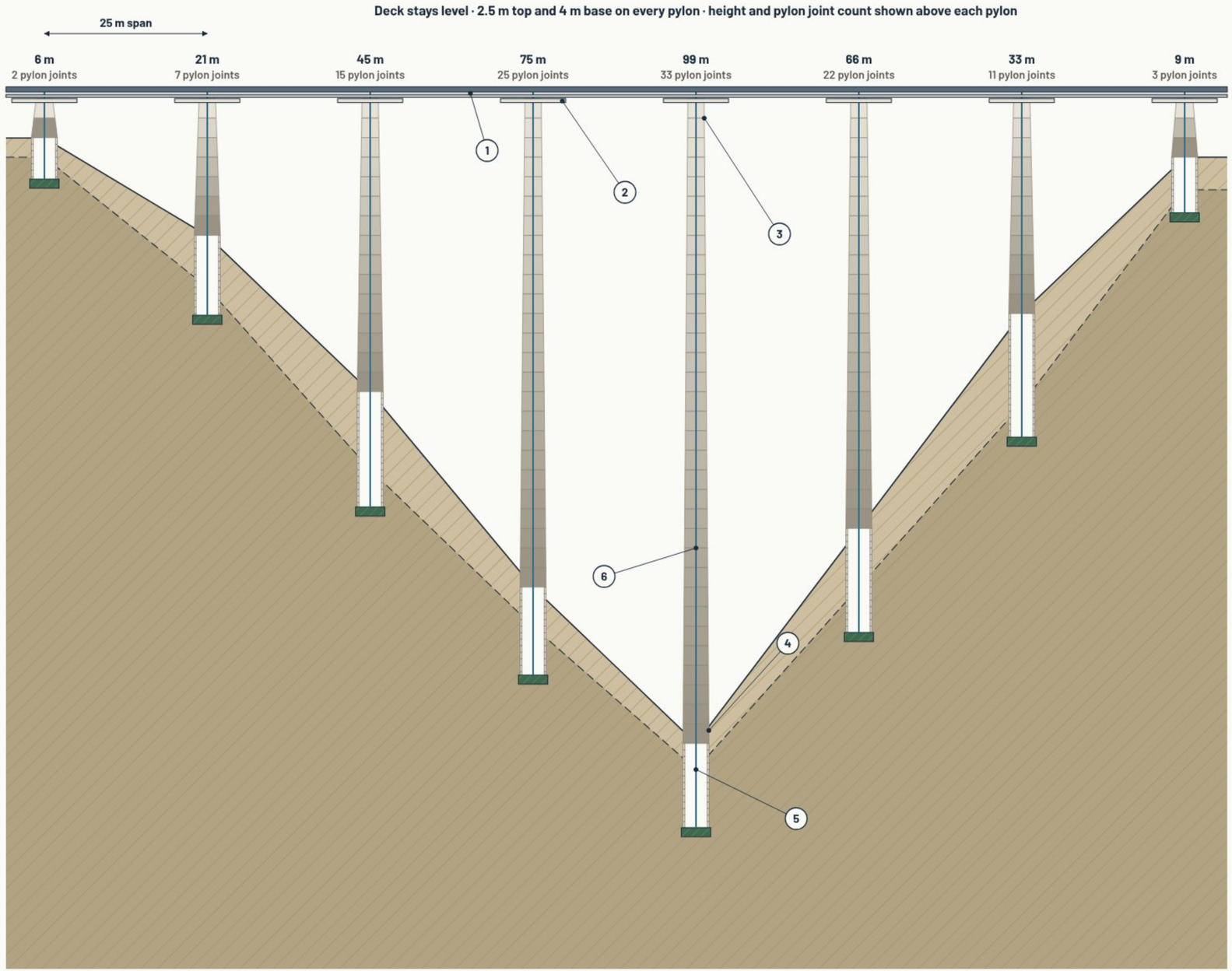

SUMMARY

ACROSS TERRAIN

- Every pylon is 4 m at the base (the caisson width) and 2.5 m at the top, whatever its height. Pylon joints are ~3 m.
- The same 2.5 m top on every pylon, so the cap beam is the same on every pylon.
- A taller pylon has more pylon joints and a gentler taper. How the pylon joint dies cover each height is left to detailed design.
- Option: one diameter all the way, using the tongue-and-groove pylon joint (sheet 001-07).
- The deck stays level; the ground decides how many pylon joints each pylon uses. Caisson depth varies with the soil, the rock and the load above.

PATENTS P4 (pylon joints) · P5 (topside)

EACH HEIGHT: 2.5 M TOP TO 4 M BASE

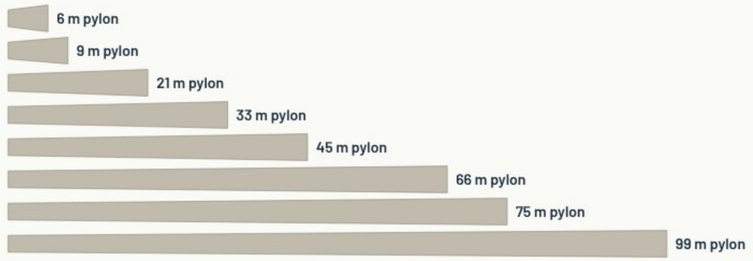

top 2.5 m (left) to base 4 m (right), to scale

OPTION: ONE DIAMETER, TONGUE AND GROOVE



Same diameter top to base: pylon joint, sheet 001-07.

CALLOUTS

1. Deck and guideway (level)
2. Cap beam, same on every pylon
3. Top pylon joint, 2.5 m
4. Base pylon joint, 4 m (caisson width)
5. Caisson, socketed into rock
6. Tension tubular

MULTI-MODAL CORRIDORS · MMC-DWG-002-07 · ACROSS TERRAIN

Schematic — not to scale unless dimensioned · Patents P4, P5
Rev F · 21 Nov 2026 · BB (Boh Brett) Murrell

MMC-DWG-003-00 · CONSTRUCTION SEQUENCE

CONSTRUCTION SHEET 0 · OVERVIEW · FOUNDATION TEAM AHEAD, TOPSIDE TEAM BEHIND · LEVEL 1 FORWARD, UPPER LEVELS BACK

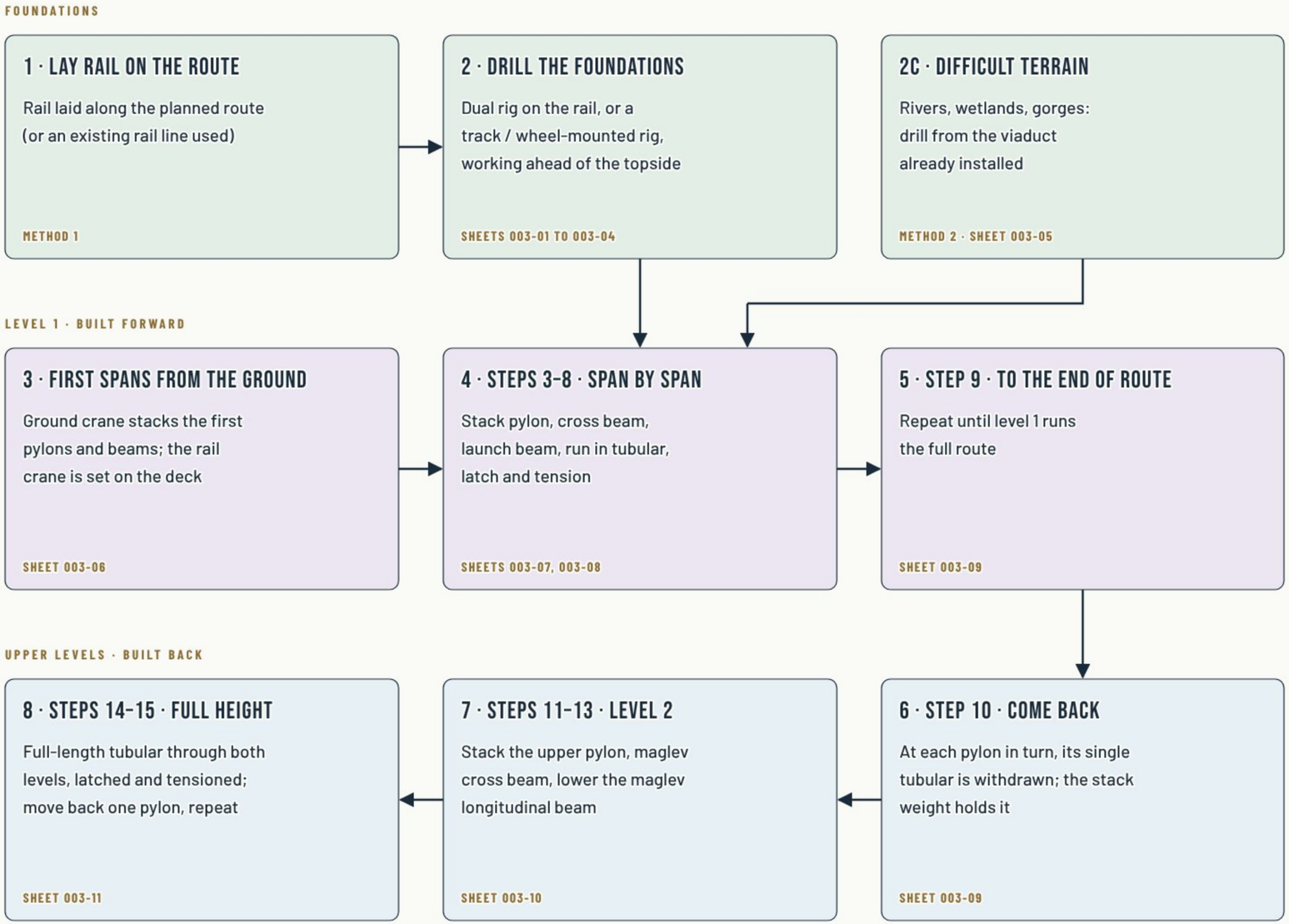

MMC-VB shown: freight level 8 m, maglev level 19 m. The same sequence extends to more levels for MMC-VA.

Foundations · Level 1, forward · Upper levels, back

SUMMARY

CONSTRUCTION SEQUENCE

- Two teams: the foundation team drills ahead; the topside team builds behind it.
- Foundations are drilled from rail laid on the route (dual rig) or by a track / wheel-mounted rig. Over difficult terrain they are drilled from the viaduct already built.
- The first spans are built from the ground; then the rail crane builds level 1 forward from the deck.
- When level 1 runs the route, the crane comes back and builds the upper levels pylon by pylon, finishing each with a full-length tubular.

PATENTS P1–P5

MULTI-MODAL CORRIDORS · MMC-DWG-003-00 · CONSTRUCTION SEQUENCE

Schematic — not to scale unless dimensioned · Patents P1–P5
Rev D · 21 Nov 2026 · BB (Boh Brett) Murrell

MMC-DWG-003-01 · DUAL DRILLING FOUNDATION SYSTEM

CONSTRUCTION SHEET 1 · SUMMARY · TOP VIEW · RIG ON THE EXISTING RAIL DRILLS BOTH LEGS OF A PYLON AT ONCE

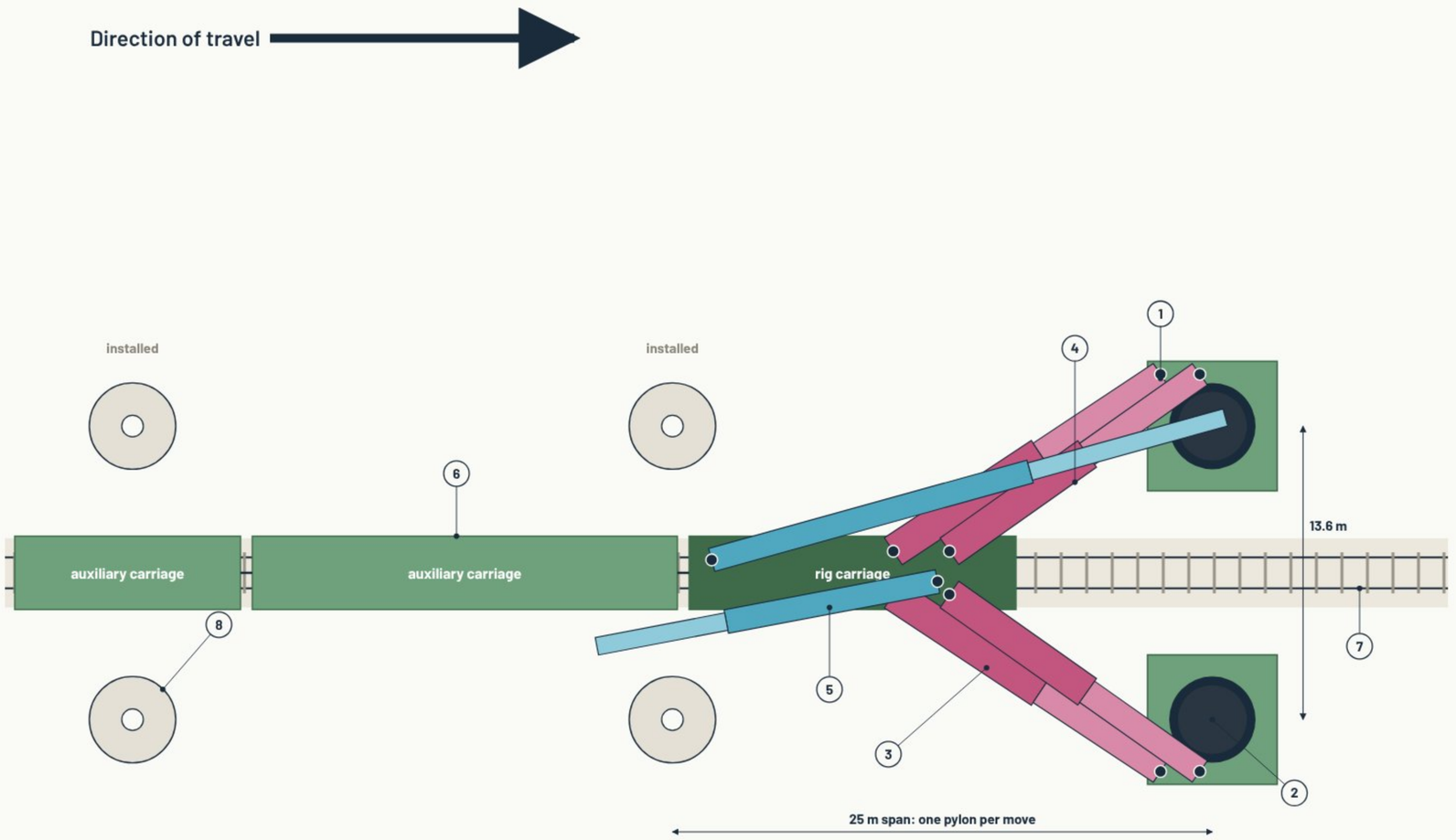

SUMMARY

DUAL DRILLING RIG

- Method 1: runs on an existing rail line, or on rail laid along the planned route, and drills both foundations of a dual-leg pylon at the same time.
- Two derricks are held out either side of the line on lever arms. Each has its own top drive, drill pipe, caisson ram and cutter head.
- The lever arms are parallel pairs, so the derricks stay square to the corridor as they reach out to the leg positions.
- Telescopic cranes feed caisson rings forward to the derricks and lift from the carriages behind.
- When both caissons are down, the rig moves forward one 25 m span to the next pylon.

PATENTS P3 (Foundation Drilling System)

CALLOUTS

1. Derrick, one per leg
2. Caisson being drilled
3. Lever arms (parallel pairs)
4. Telescopic crane
5. Rig carriage on the rail
6. Auxiliary carriages
7. Existing rail line
8. Installed caisson

Rig, carriages, derricks · Lever arms · Cranes · Installed caisson · Caisson being drilled

MULTI-MODAL CORRIDORS · MMC-DWG-003-01 · DUAL DRILLING RIG · TOP VIEW

Schematic — not to scale unless dimensioned · Patent P3
Rev B · 21 Nov 2026 · BB (Boh Brett) Murrell

MMC-DWG-003-02 · DUAL DRILLING RIG: SIDE PROFILE

CONSTRUCTION SHEET 2 · SUMMARY · SIDE PROFILE THROUGH THE BORE · DRILLING THE NEXT PYLON, INSTALLED CAISSON BEHIND

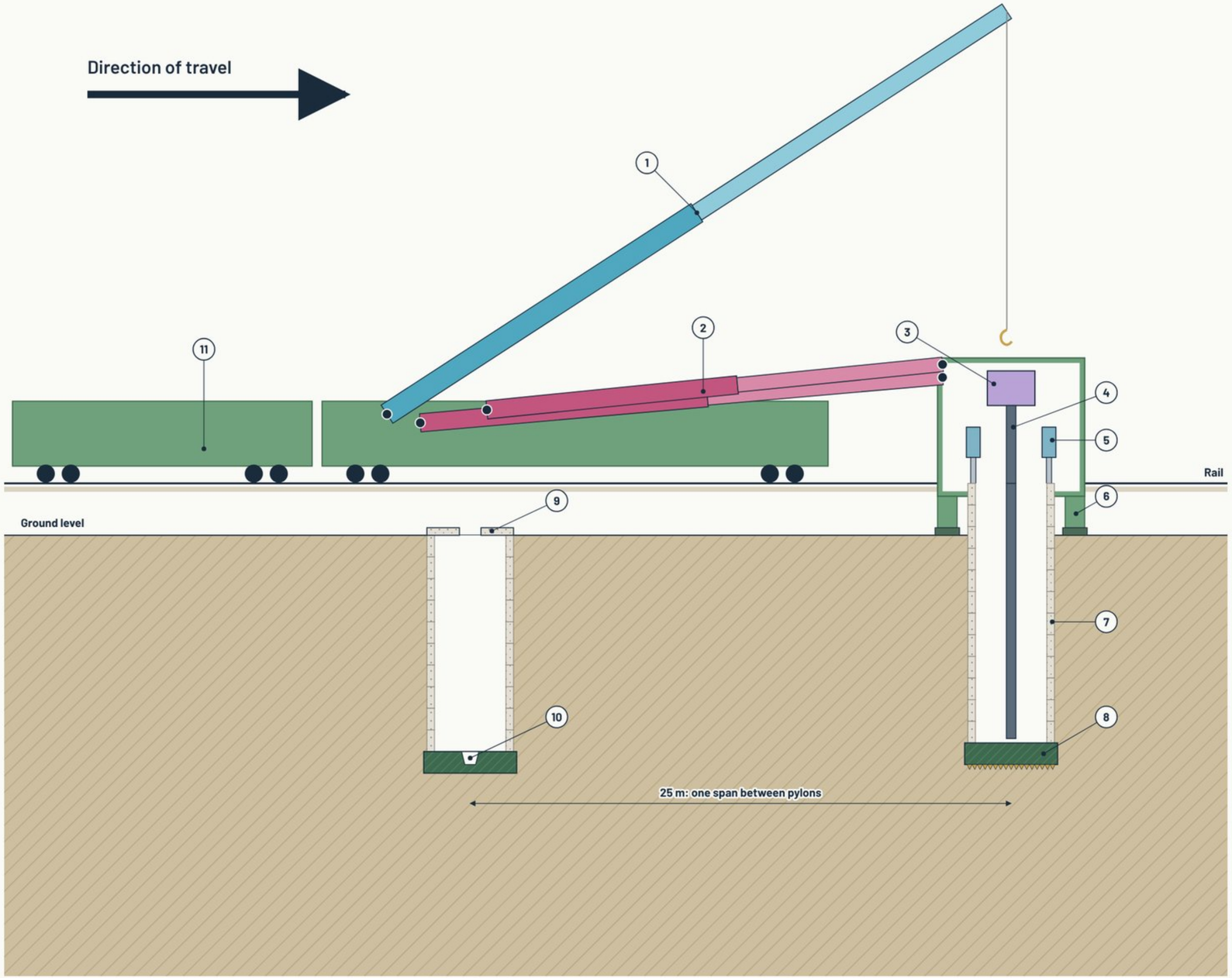

SUMMARY

DUAL DRILLING RIG: SIDE

- Method 1: the rig carriages run on an existing rail line or on rail laid along the planned route. Lever arms reach forward and set the derrick over the next bore.
- In the derrick: the top drive turns the drill pipe and cutter head; the caisson rams on the hydraulic legs push the caisson rings down behind it.
- The crane on the rig carriage lifts caisson rings and pipe into the derrick.
- Behind the rig, the finished caisson has its caisson head on top and the cutter head left at depth as the anchor, with the receptacle ready for the tubular.

PATENTS P3 (Foundation Drilling System) · P1, P2

CALLOUTS

1. Crane (telescopic) with hook
2. Lever arms (telescopic)
3. Top drive
4. Drill pipe
5. Caisson ram
6. Derrick hydraulic legs
7. Caisson rings, following down
8. Cutter head drilling
9. Caisson head (installed)
10. Anchor receptacle in the cutter head
11. Rig and auxiliary carriages

Rig, carriages, derrick · Lever arms · Crane · Top drive · Drill pipe · Caisson rams · Caisson · Cutter head

MULTI-MODAL CORRIDORS · MMC-DWG-003-02 · DUAL DRILLING RIG · SIDE PROFILE

Schematic — not to scale unless dimensioned · Patents P1–P3
Rev A · 7 Nov 2026 · BB (Boh Brett) Murrell

MMC-DWG-003-03 · DUAL DRILLING RIG: REAR VIEW

CONSTRUCTION SHEET 3 · SUMMARY · LOOKING ALONG THE RAIL · LEVER ARMS SET EACH DERRICK TO ITS OWN GROUND LEVEL

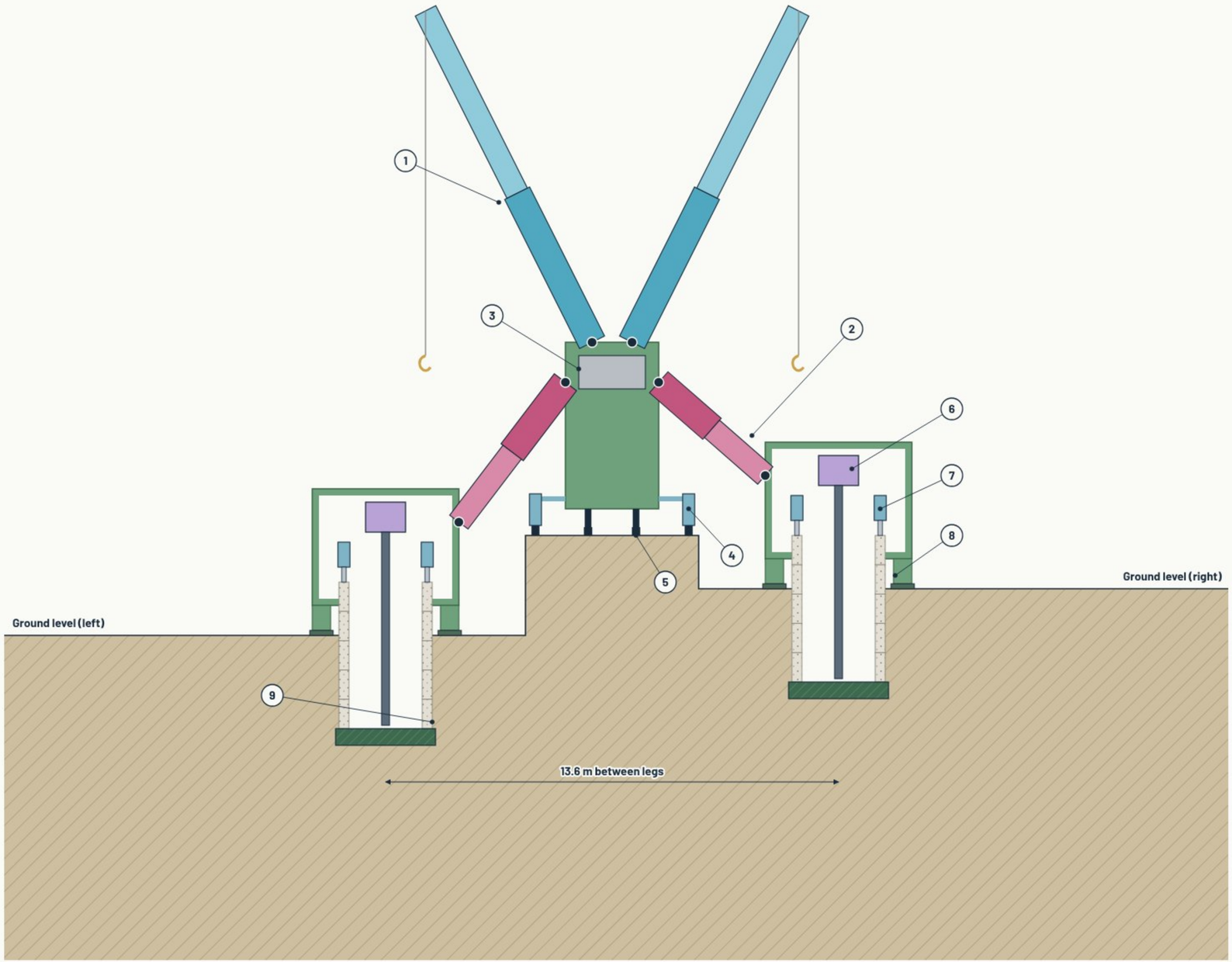

SUMMARY

DUAL DRILLING RIG: REAR

- Method 1, looking along the rail (existing, or laid on the planned route). The rig body stands on the rail with outriggers set down on the formation while drilling.
- A lever arm on each side reaches out to a derrick over each leg position, 13.6 m apart.
- The arms are variable height: each derrick sets down on its own ground level, so the rig drills across uneven ground, cuttings and embankments.
- Two cranes, one over each derrick, feed caisson rings and pipe.

PATENTS P3 (Foundation Drilling System)

CALLOUTS

1. Cranes, one per derrick
2. Lever arm (variable height)
3. Rig body
4. Outriggers
5. Rail
6. Top drive
7. Caisson ram
8. Derrick hydraulic legs
9. Cutter head drilling

Rig and derricks · Lever arms · Cranes · Outriggers / rams · Top drive · Drill pipe · Caisson · Cutter head

MULTI-MODAL CORRIDORS · MMC-DWG-003-03 · DUAL DRILLING RIG · REAR VIEW

Schematic — not to scale unless dimensioned · Patent P3
Rev B · 21 Nov 2026 · BB (Boh Brett) Murrell

MMC-DWG-003-04 · MOBILE DRILLING RIG

CONSTRUCTION SHEET 4 · STEP 2 · TRACK- OR WHEEL-MOUNTED RIG · THE FOUNDATION TEAM WORKS AHEAD OF THE TOPSIDE TEAM

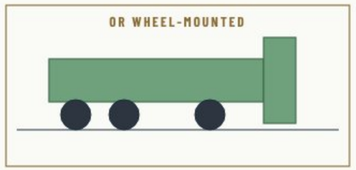

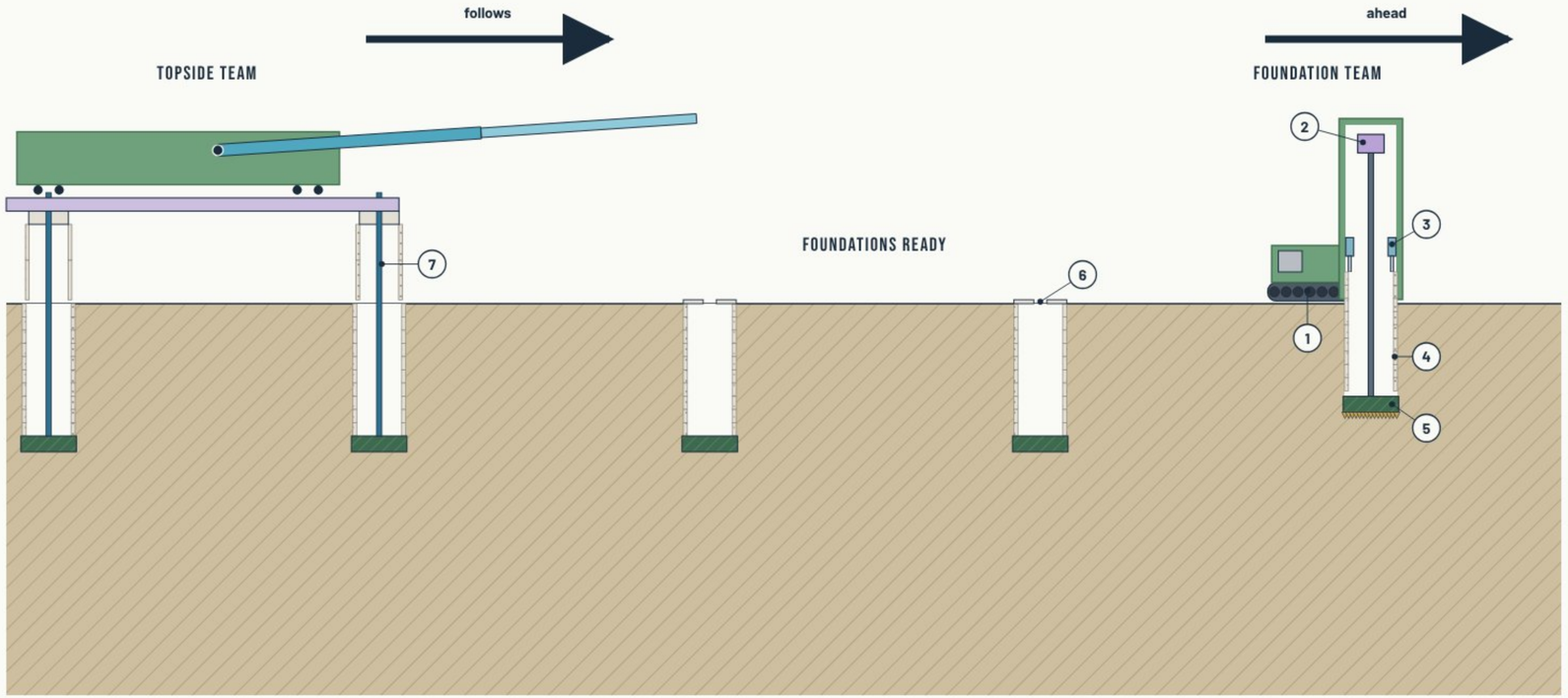

SUMMARY

MOBILE DRILLING RIG

- A third way to drill the foundations: a self-contained rig on tracks or wheels, independent of the rail line.
- The foundation team works ahead of the topside team, drilling and setting caissons along the route.
- Each foundation is left ready, caisson head on top and cutter head at depth, for the topside team to stack on.
- Same derrick as the rail rig: top drive turns the drill pipe and cutter head; caisson rams push the rings down behind it.

PATENTS P3 (Foundation Drilling System) · P1, P2

CALLOUTS

1. Tracked carrier
2. Top drive
3. Caisson ram
4. Caisson rings
5. Cutter head drilling
6. Foundation ready
7. Topside built behind

Rig / carriages · Tracks · Top drive · Drill pipe · Caisson · Longitudinal beam · Tension tubular · Cutter head

MULTI-MODAL CORRIDORS · MMC-DWG-003-04 · MOBILE DRILLING RIG

Schematic — not to scale unless dimensioned · Patents P1–P3
Rev C · 21 Nov 2026 · BB (Boh Brett) Murrell

MMC-DWG-003-05 · DRILLING FROM THE VIADUCT

CONSTRUCTION SHEET 5 · SCENARIO B · RAIL CRANE ON THE COMPLETED VIADUCT DRILLS AND INSTALLS THE NEXT FOUNDATION · OVER WATER

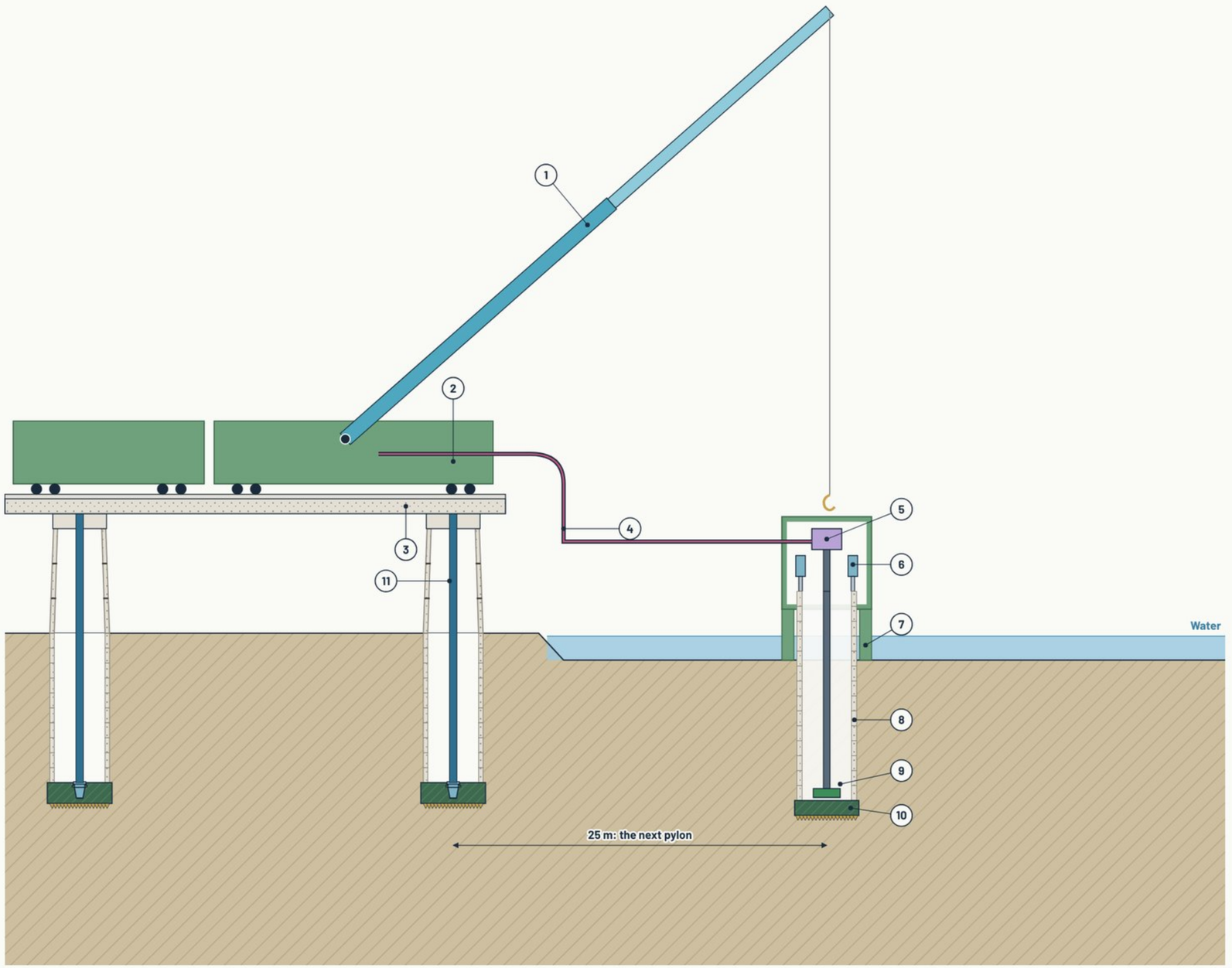

SUMMARY

SCENARIO B: FROM THE DECK

- Scenario B, foundations from the deck: rivers, wetlands, ravines and existing roads and rail. A bespoke rail crane with a lowerable derrick works forward along the viaduct already installed (detailed design).
- The crane carriage runs on the finished deck and lowers a derrick onto the bed at the next pylon position, 25 m ahead.
- An umbilical from the carriage carries power and hydraulics to the derrick.
- The derrick drills the caisson in place: the top drive (or a downhole motor) turns the cutter head; the caisson rams push the rings down behind it.
- The crane lifts the derrick back out, then the next pylon and deck span are built and the crane moves forward on them.

PATENTS P3 (Foundation Drilling System) · P1, P2

CALLOUTS

1. Rail crane (telescopic)
2. Crane carriages on the deck
3. Completed deck and beams
4. Umbilical: power + hydraulics
5. Top drive
6. Caisson ram
7. Derrick hydraulic legs
8. Caisson rings
9. Downhole motor
10. Cutter head drilling
11. Completed pylon + tubular

Carriages, derrick · Crane · Umbilical · Top drive · Downhole motor · Drill pipe · Water · Cutter head

MULTI-MODAL CORRIDORS · MMC-DWG-003-05 · DRILLING FROM THE VIADUCT

Schematic — not to scale unless dimensioned · Patents P1–P3
Rev B · 10 Nov 2026 · BB (Boh Brett) Murrell

MMC-DWG-003-06 · FIRST SPANS FROM THE GROUND

CONSTRUCTION SHEET 6 · STARTING THE TOPSIDE · A GROUND CRANE BUILDS THE FIRST SPANS, THEN THE RAIL CRANE TAKES OVER ON THE DECK

A · GROUND CRANE STACKS THE FIRST PYLONS

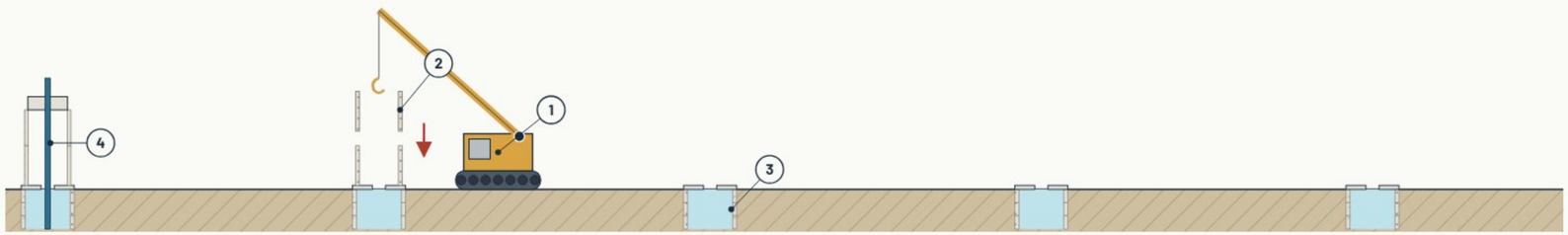

B · GROUND CRANE SETS THE FIRST BEAMS; THE RAIL CRANE IS LIFTED ONTO THE DECK

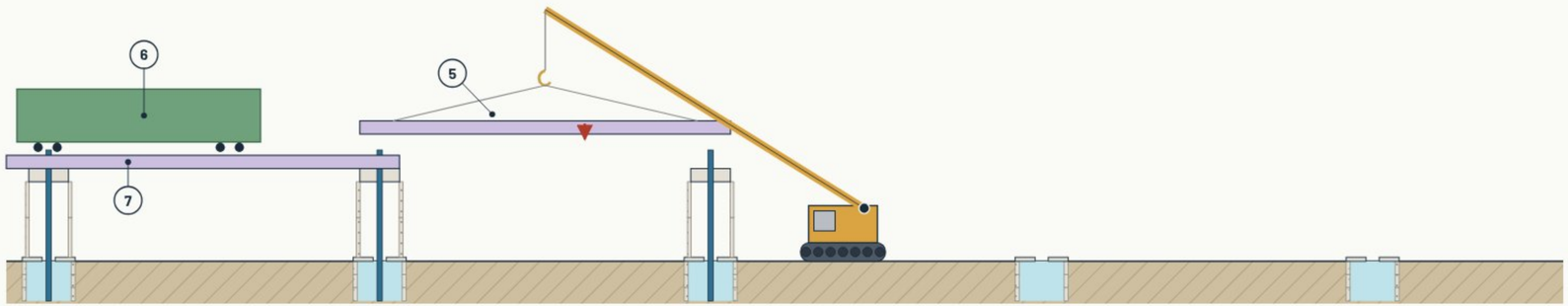

Ground crane · Tracks · Rail crane carriage · Precast concrete · Longitudinal beam · Caisson · Tension tubular

SUMMARY

FIRST SPANS

- The topside has to start somewhere: the first few spans are built from the ground.
- A ground crane (tracked) stacks the first pylons on the caissons and sets the first cross beams and longitudinal beams.
- The first pylons are tensioned in the usual way (steps 7–8).
- Once a few spans are complete, the rail crane carriages are lifted onto the deck and take over, building forward from the deck (steps 3–10).

PATENTS P4 (stack) · P5 (topside)

CALLOUTS

1. Ground crane (tracked)
2. Pylon joint on the hook
3. Caissons drilled ahead
4. First pylon, tensioned
5. First longitudinal beams
6. Rail crane set on the deck
7. First span complete

MULTI-MODAL CORRIDORS · MMC-DWG-003-06 · FIRST SPANS FROM THE GROUND

Schematic — not to scale unless dimensioned · Patents P4, P5
Rev C · 21 Nov 2026 · BB (Boh Brett) Murrell

MMC-DWG-003-07 · BUILD LEVEL 1: STEPS 3–5

CONSTRUCTION SHEET 7 · STEPS 3–5 · RAIL CRANE ON THE FREIGHT DECK BUILDS THE NEXT PYLON AND SPAN · MMC-VB LEVELS

STEP 3 · LIFT THE PYLON JOINTS ONTO THE CAISSON

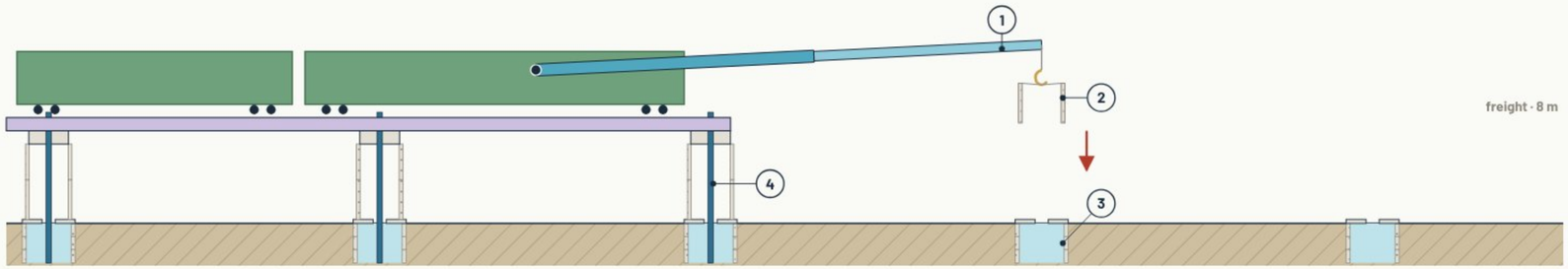

STEP 4 · STACK TO THE FREIGHT CROSS BEAM

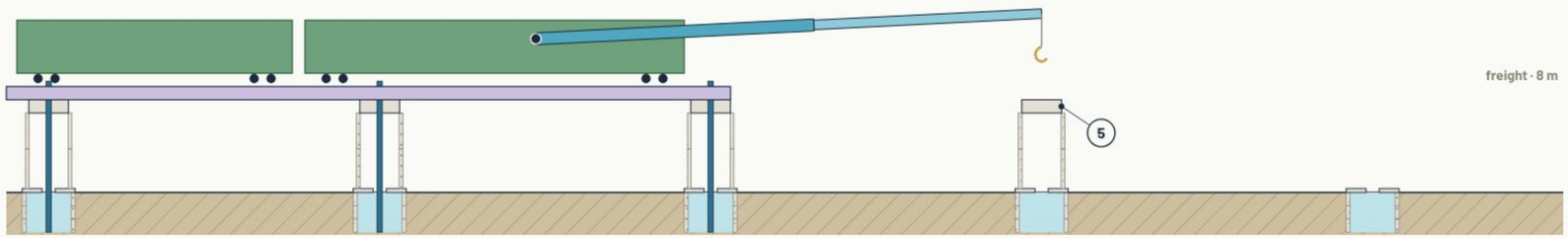

STEP 5 · LAUNCH THE FREIGHT LONGITUDINAL BEAM

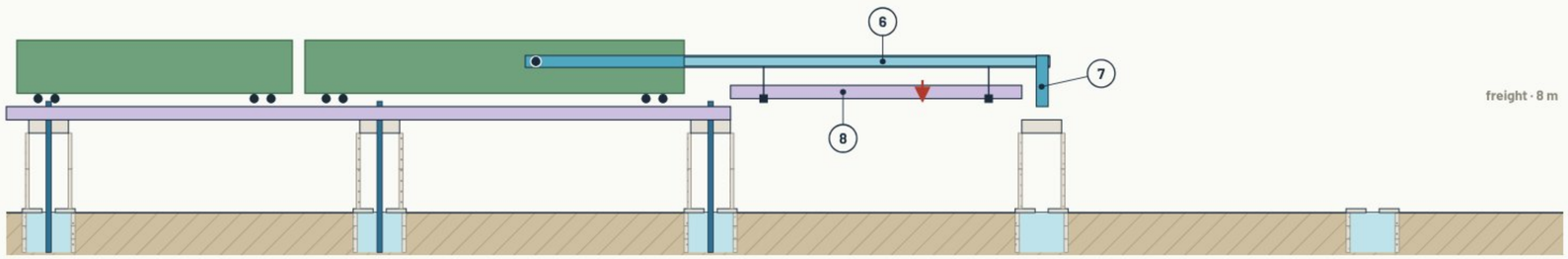

Carriages · Rail crane · Precast concrete · Longitudinal beam · Caisson · Tension tubular · Movement / tension

SUMMARY

STEPS 3–5

- The crane works from the finished freight deck; the foundation (caisson + cutter head) is already in, drilled ahead by the foundation team.
- Step 3: lower pylon joints are lifted from the carriages onto the caisson head.
- Step 4: the pylon is stacked to 6 m and the freight cross beam placed.
- Step 5: the boom works as a launching beam, tip leg on the new cross beam, and lowers the longitudinal beam across the 25 m span.

PATENTS P1, P2 (anchor, tubular) · P4 (stack) · P5 (topside)

CALLOUTS

1. Rail crane
2. Pylon joint on the hook
3. Caisson, drilled ahead
4. Completed pylon + tubular
5. Freight cross beam
6. Launching boom
7. Tip leg on the cross beam
8. Longitudinal beam lowering

MULTI-MODAL CORRIDORS · MMC-DWG-003-07 · BUILD LEVEL 1: STEPS 3–5

Schematic — not to scale unless dimensioned · Patents P1, P2, P4, P5
Rev D · 21 Nov 2026 · BB (Boh Brett) Murrell

MMC-DWG-003-08 · BUILD LEVEL 1: STEPS 6–8

CONSTRUCTION SHEET 8 · STEPS 6–8 · BEAM SET · TUBULAR RUN IN, LATCHED AND TENSIONED · MMC-VB LEVELS

STEP 6 · LONGITUDINAL BEAM SET ON THE NEW CROSS BEAM

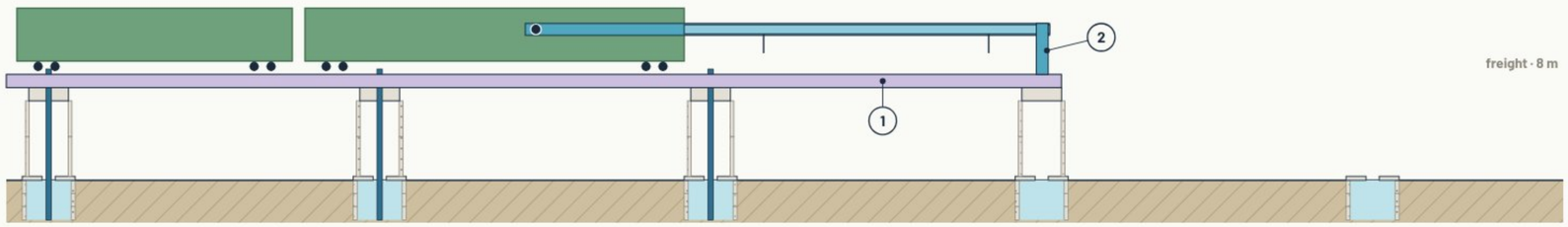

STEP 7 · RUN THE TENSION TUBULAR INTO THE NEW PYLON

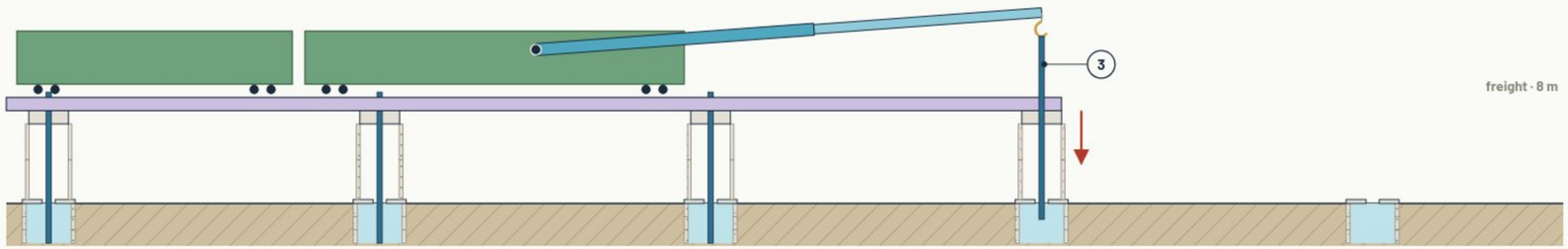

STEP 8 · LATCH THE ANCHOR AND APPLY TENSION

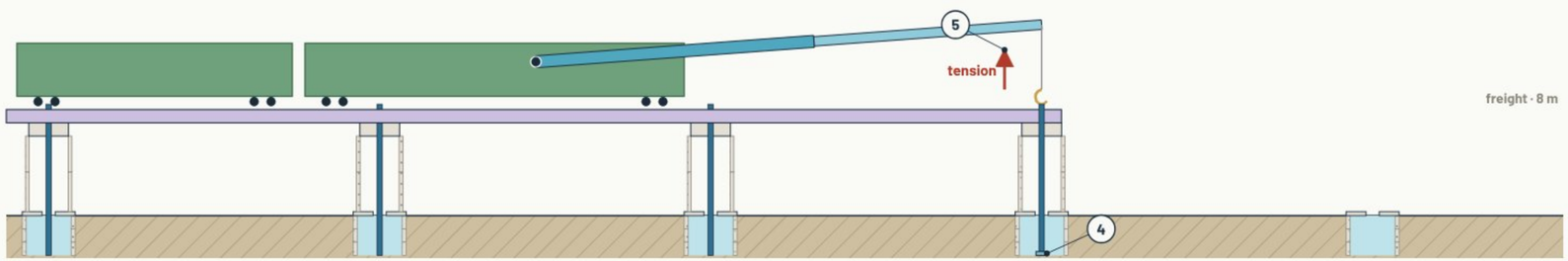

Carriages · Rail crane · Precast concrete · Longitudinal beam · Caisson · Tension tubular · Movement / tension

SUMMARY

STEPS 6–8

- Step 6: the longitudinal beam is set on the new cross beam; the span is complete.
- Step 7: the crane runs the tension tubular down the hollow pylon and caisson.
- Step 8: the tubular latches into the cutter head and is tensioned at the top, clamping the stack and beams together.
- The crane moves forward onto the new span.

PATENTS P1, P2 (anchor, tubular) · P4 (stack) · P5 (topside)

CALLOUTS

1. New longitudinal beam
2. Launching boom, tip leg
3. Tubular on the hook
4. Latched in the cutter head
5. Tension at the top

MULTI-MODAL CORRIDORS · MMC-DWG-003-08 · BUILD LEVEL 1: STEPS 6–8

Schematic — not to scale unless dimensioned · Patents P1, P2, P4, P5
Rev D · 21 Nov 2026 · BB (Boh Brett) Murrell

MMC-DWG-003-09 · LEVEL 1 COMPLETE: STEPS 9–10

CONSTRUCTION SHEET 9 · STEPS 9–10 · LEVEL 1 RUNS THE FULL ROUTE, THEN THE CRANE COMES BACK · MMC-VB LEVELS

STEP 9 · CONTINUE BUILDING LEVEL 1 FORWARD ALONG THE ROUTE

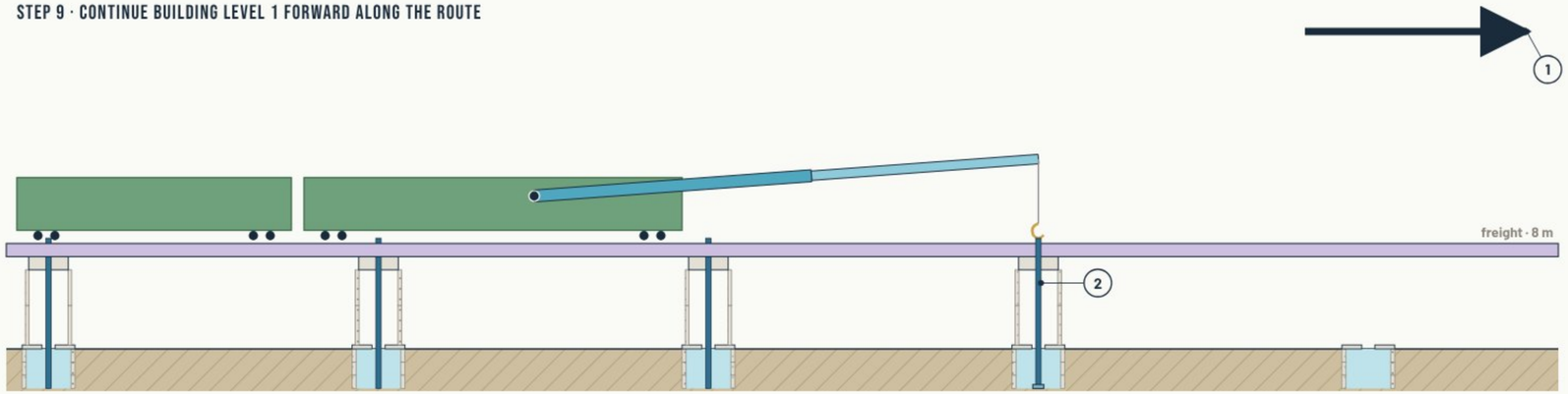

STEP 10 · TRAVEL BACK: WITHDRAW THE TUBULAR FROM THE NEXT PYLON TO BUILD UP

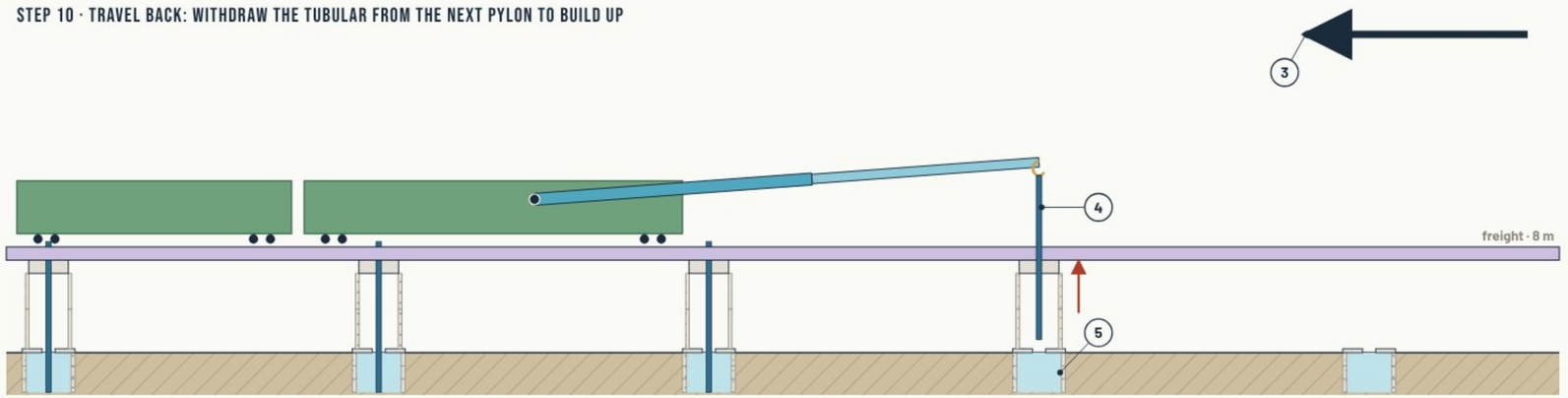

Carriages · Rail crane · Precast concrete · Longitudinal beam · Caisson · Tension tubular · Movement / tension

SUMMARY

STEPS 9–10

- Step 9: the crane repeats steps 3–8, span by span, until level 1 runs the full route.
- Step 10: the crane comes back. At the pylon to be built up, its single tubular is withdrawn so the upper pylon can be stacked.
- Only that one tubular is out; the stack's own weight holds it, and every other pylon stays tensioned.

PATENTS P1, P2 (anchor, tubular) · P4 (stack) · P5 (topside)

CALLOUTS

1. Travel forward
2. Tubular installed, tensioned
3. Travel back
4. Tubular withdrawn
5. Caisson, tubular out

MULTI-MODAL CORRIDORS · MMC-DWG-003-09 · LEVEL 1 COMPLETE: STEPS 9–10

Schematic — not to scale unless dimensioned · Patents P1, P2, P4, P5
Rev E · 21 Nov 2026 · BB (Boh Brett) Murrell

MMC-DWG-003-10 · BUILD LEVEL 2: STEPS 11–13

CONSTRUCTION SHEET 10 · STEPS 11–13 · WORKING BACK ALONG THE FREIGHT DECK · MMC-VB LEVELS

STEP 11 · STACK THE UPPER PYLON AND MAGLEV CROSS BEAM

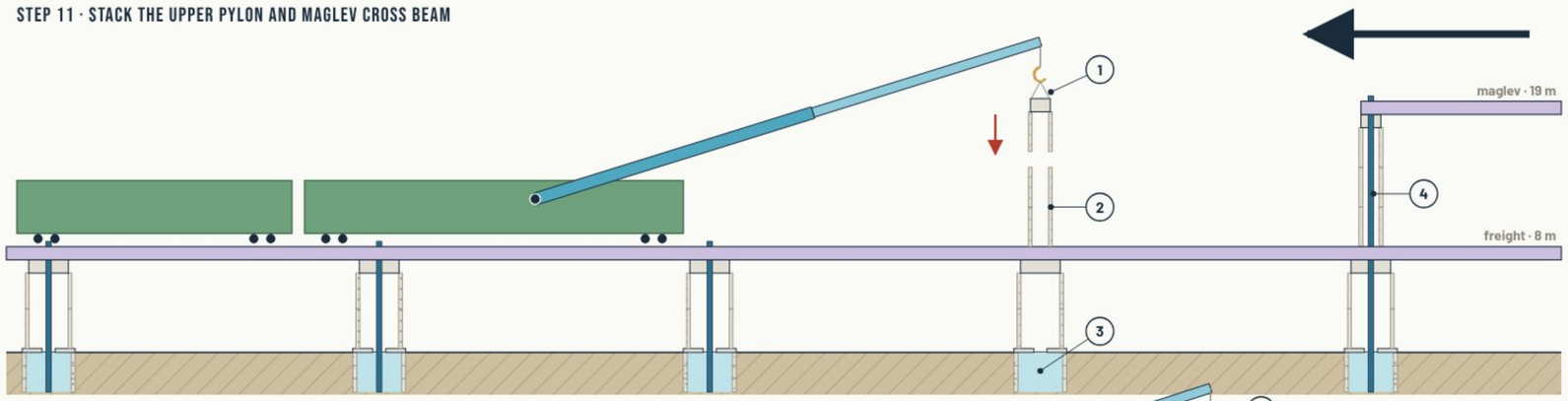

STEP 12 · LOWER THE MAGLEV LONGITUDINAL BEAM

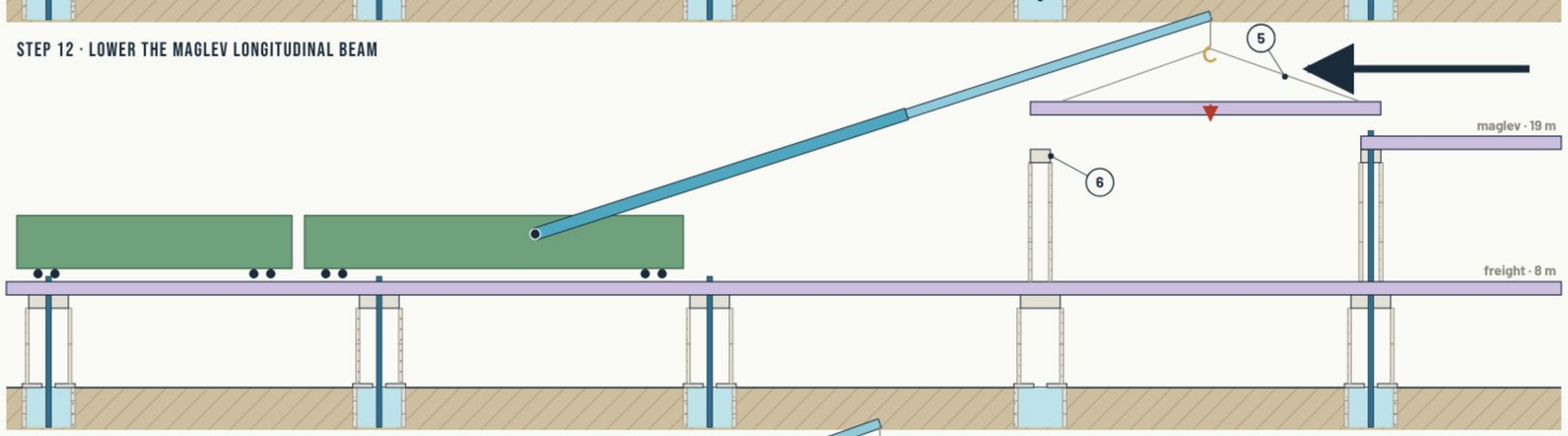

STEP 13 · MOVE BACK ONE PYLON AND REPEAT

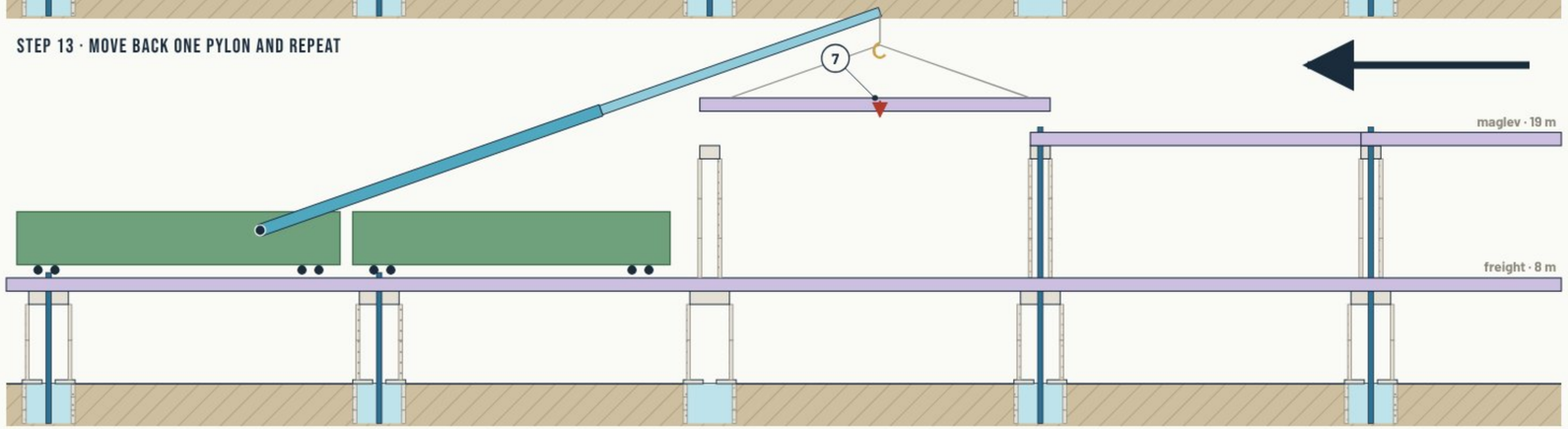

Carriages · Rail crane · Precast concrete · Longitudinal beam · Caisson · Tension tubular · Movement / tension

SUMMARY

STEPS 11–13

- Step 11: upper pylon joints are stacked on the freight beams to 17 m, then the maglev cross beam.
- Step 12: the maglev longitudinal beam is lowered on a spreader onto the cross beams.
- Step 13: the crane moves back one pylon and repeats.

PATENTS P1, P2 (anchor, tubular) · P4 (stack) · P5 (topside)

CALLOUTS

1. Top pylon joint + cross beam
2. Upper pylon
3. Tubular out (this pylon only)
4. Completed full-height pylon
5. Spreader bridle
6. Maglev cross beam
7. Next maglev beam

MULTI-MODAL CORRIDORS · MMC-DWG-003-10 · BUILD LEVEL 2: STEPS 11–13

Schematic — not to scale unless dimensioned · Patents P1, P2, P4, P5
Rev E · 21 Nov 2026 · BB (Boh Brett) Murrell

MMC-DWG-003-11 · BUILD LEVEL 2: STEPS 14–15

CONSTRUCTION SHEET 11 · STEPS 14–15 · FULL-LENGTH TUBULAR, LATCHED AND TENSIONED · MMC-VB LEVELS

STEP 14 · RUN THE FULL-LENGTH TUBULAR THROUGH BOTH LEVELS

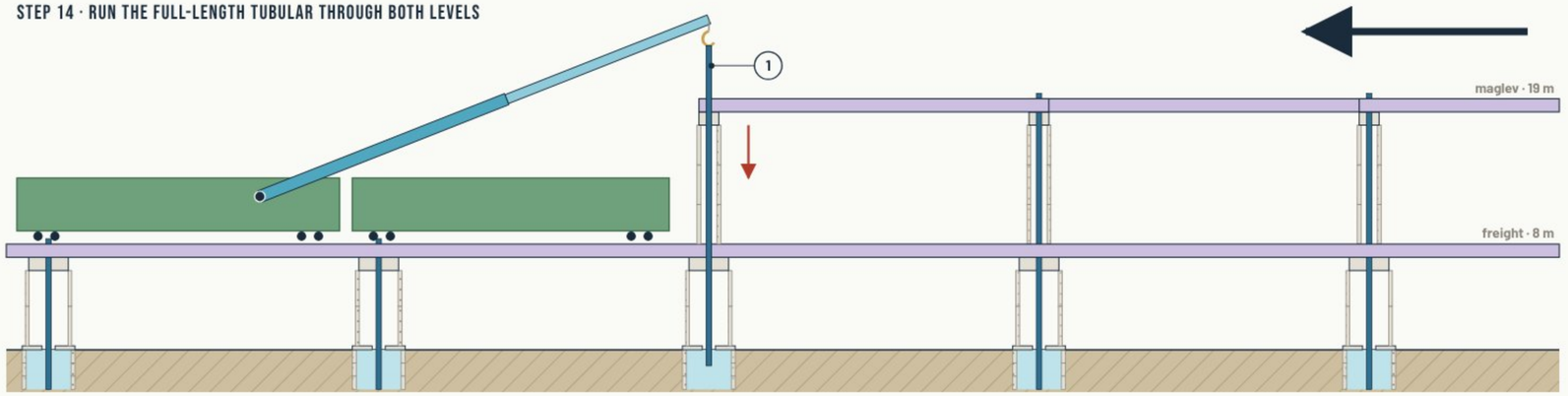

STEP 15 · LATCH THE ANCHOR AND TENSION THE FULL HEIGHT

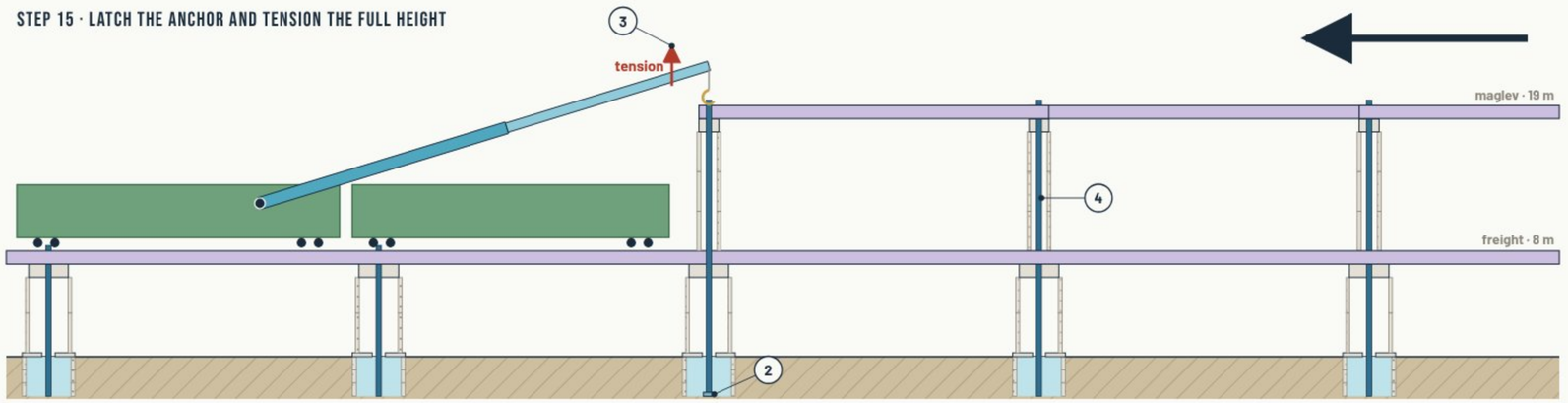

Carriages · Rail crane · Precast concrete · Longitudinal beam · Caisson · Tension tubular · Movement / tension

SUMMARY

STEPS 14–15

- Step 14: the crane runs the full-length tubular down through both levels and the caisson.
- Step 15: it latches into the cutter head and is tensioned at the top, clamping both levels into one structure.
- The crane moves back one pylon and repeats steps 10–15 until level 2 is complete.

PATENTS P1, P2 (anchor, tubular) · P4 (stack) · P5 (topside)

CALLOUTS

1. Full-length tubular
2. Latched in the cutter head
3. Tension at the top
4. Completed full-height pylon

MULTI-MODAL CORRIDORS · MMC-DWG-003-11 · BUILD LEVEL 2: STEPS 14–15

Schematic — not to scale unless dimensioned · Patents P1, P2, P4, P5
Rev F · 21 Nov 2026 · BB (Boh Brett) Murrell

MMC-DWG-003-12 · FOUNDATION DRILLING, STEP BY STEP

CONSTRUCTION SHEET 12 · FOUNDATION · RIG SET UP TO CAISSON HEAD · ONE PYLON LEG

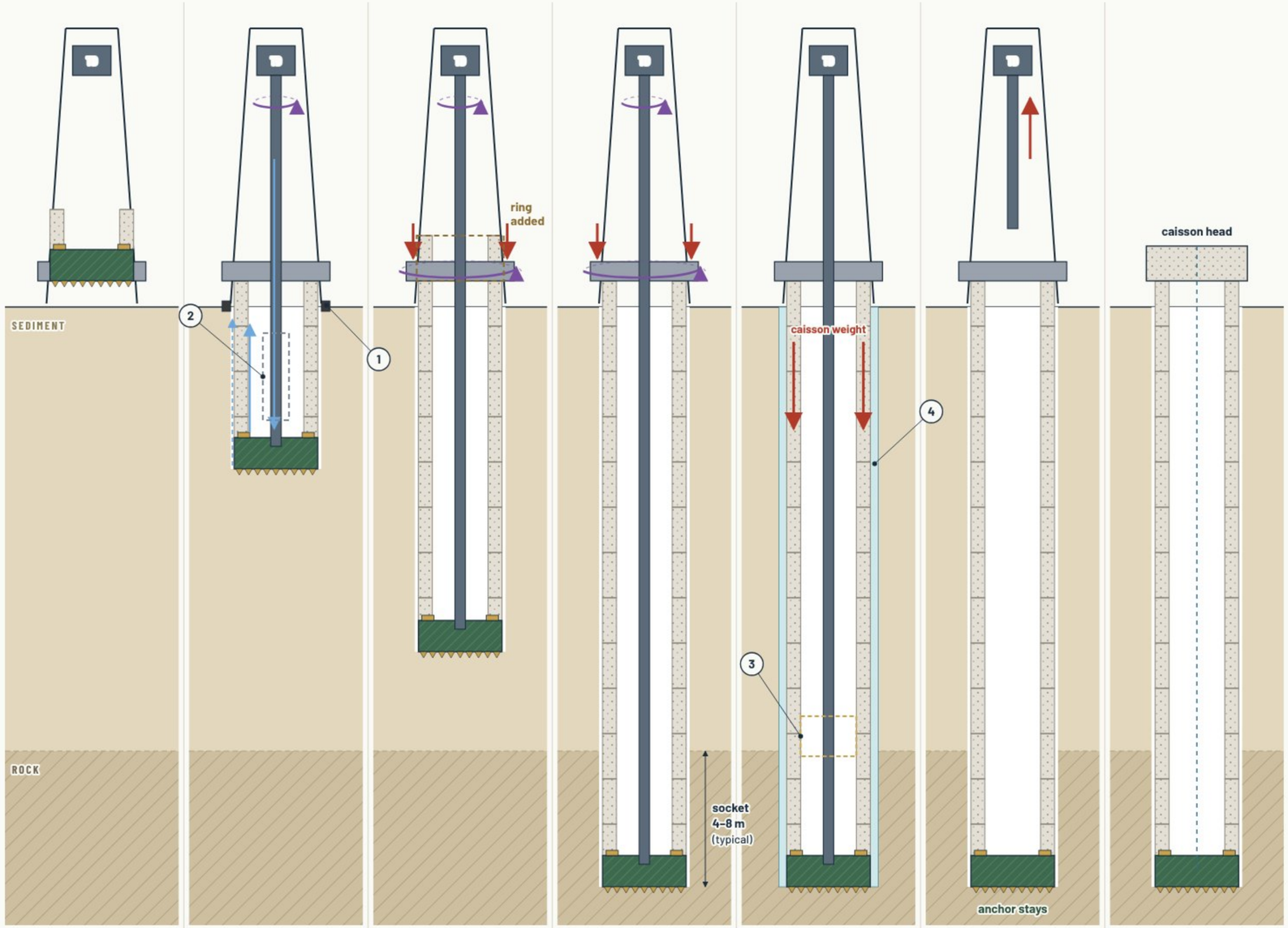

01 SET UP

Rig over the pylon point. Lead ring + cutter head set on the guide.

Option: guide template (rivers)

02 DRILL

Top drive turns the drill pipe and cutter head. Mud down, cuttings up.

Option: downhole motor

03 ADVANCE

Spinner turns the caisson; rams push it down. Rings added at the top.

Option: no spin (flush rings)

04 SOCKET

Cutter head drills into rock to the specified socket depth.

05 HOLD

Caisson weight holds it at depth. Grout where the ground needs it.

Option: grout · packer

06 RELEASE

Drill pipe pulled out. The cutter head stays as the anchor.

07 FINISH

Caisson head placed. Ready for the pylon and the tubular.

Precast concrete · Cutter head · Inserts / packer · Drill pipe / top drive · Spinner / ram frame · Grout (optional) · Mud / cuttings · Force · Rotation · Wiper seal · Downhole motor

SUMMARY

FOUNDATION DRILLING

- The foundation team works ahead of the topside team, one pylon leg at a time (the dual rig drills both legs at once).
- Drive: the top drive turns the drill pipe and cutter head, or a downhole motor where the application needs it. The caisson spinner turns the caisson; a thrust bearing decouples the two.
- Weight on bit = caisson ram force + drill string weight, combined to give the exact load. The drill string can be lifted to take load off the bit, or ram force added.
- Most returns go up the caisson to the mud system; some come up outside it, captured by a wiper seal at the bit or at the surface (detail to be determined).
- At drilling depth the weight of the caisson holds the foundation. Grout, where the ground needs it, is placed after drilling depth is reached: alluvial soil, yes; a short rock socket (e.g. 5 m) may not need it. Option, soil dependent: a packer set inside a segmented caisson.
- The cutter head always stays as the anchor: the caisson and topside loads bear on it, and the tension tubular latches into it.

PATENTS P1 · P2 · P3

CALLOUTS

1. Wiper (TBD)
2. Motor (option)
3. Packer (option)
4. Grout (optional)

MULTI-MODAL CORRIDORS · MMC-DWG-003-12 · FOUNDATION DRILLING STEPS

Schematic — not to scale unless dimensioned · Patents P1, P2, P3
Rev F · 21 Nov 2026 · BB (Boh Brett) Murrell

MMC-DWG-003-13 · BUILD SCENARIOS ALONG A ROUTE

CONSTRUCTION SHEET 13 · MMC-VB · SCENARIO A: FOUNDATIONS AHEAD · SCENARIO B: FOUNDATIONS FROM THE DECK · SCHEMATIC, NOT TO SCALE

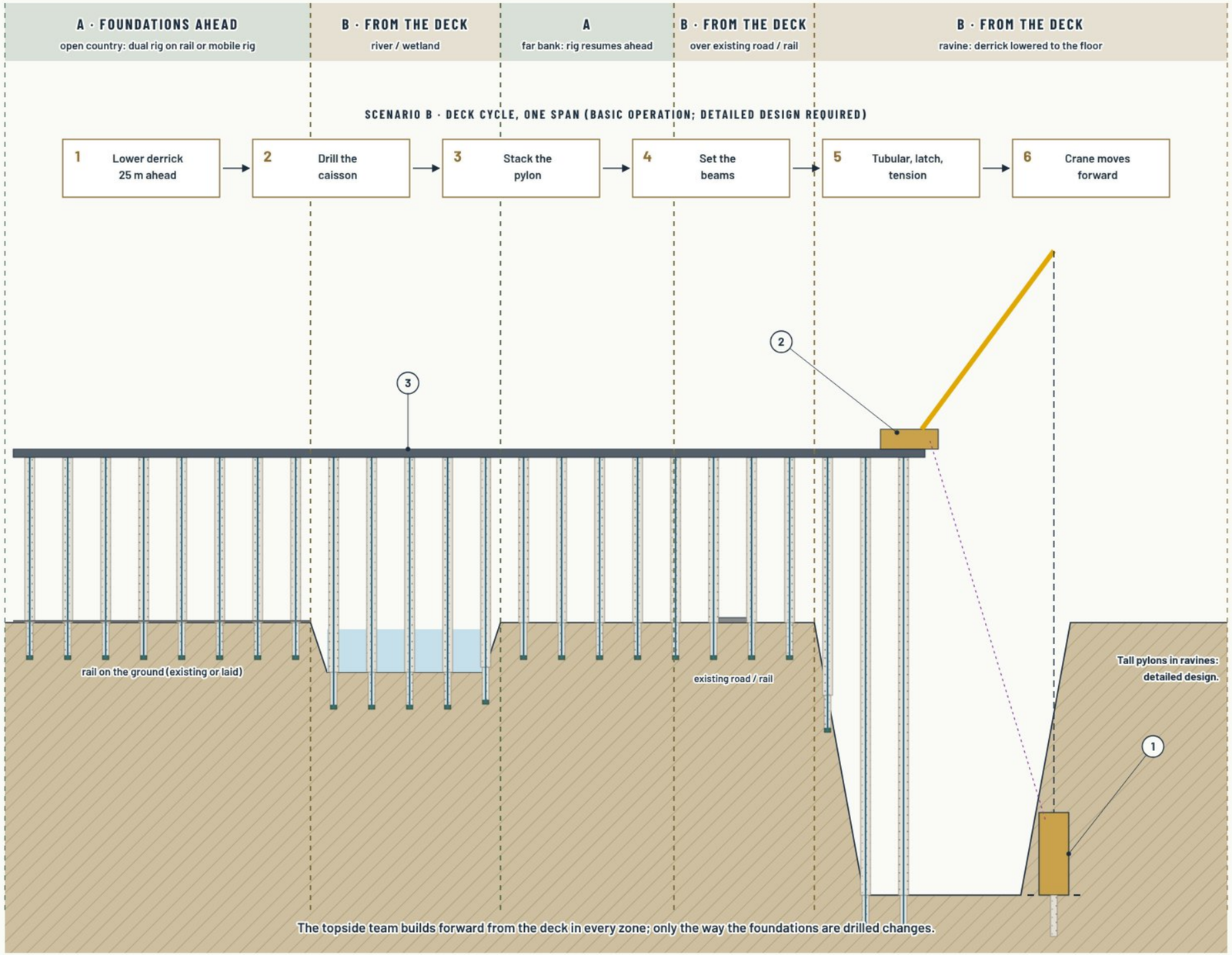

Precast concrete · Tension tubular · Deck · Rig / derrick / carriage · Crane boom · Water

SUMMARY

BUILD SCENARIOS

- Scenario A, foundations ahead: in open country the foundation team drills ahead from rail on the ground (dual rig) or off rail (mobile rig). The topside team follows, building from the deck.
- Scenario B, foundations from the deck: over rivers, wetlands, existing roads and rail, and ravines, a bespoke rail crane on the finished deck lowers a derrick to the ground 25 m ahead.
- The derrick drills the caisson in place, powered through an umbilical from the deck. The next pylon and span are then built and the crane moves forward onto them.
- At a river bank the foundation team stops; the deck method carries the crossing; the foundation team resumes ahead on the far bank.
- Ravines with tall pylons, and derrick lowering depth: detailed design.
- Level 2 is built back along the running line in every scenario.

PATENTS P3 · P1, P2, P4, P5

CALLOUTS

1. Derrick lowered by the crane, drills in place
2. Bespoke rail crane on the finished deck
3. Foundations drilled from the deck

MULTI-MODAL CORRIDORS · MMC-DWG-003-13 · BUILD SCENARIOS

Schematic — not to scale unless dimensioned · Patents P1–P5
Rev D · 21 Nov 2026 · BB (Boh Brett) Murrell

MMC-DWG-003-14 · MANUFACTURE: SKIN, RIB AND DIE

CONSTRUCTION SHEET 14 · PATENT 7 · PYLON JOINT SHOWN · SKIN AND RIB MADE AT THE HUB, CONCRETE INJECTED AT THE SPOKE · SCHEMATIC, NO DETAIL

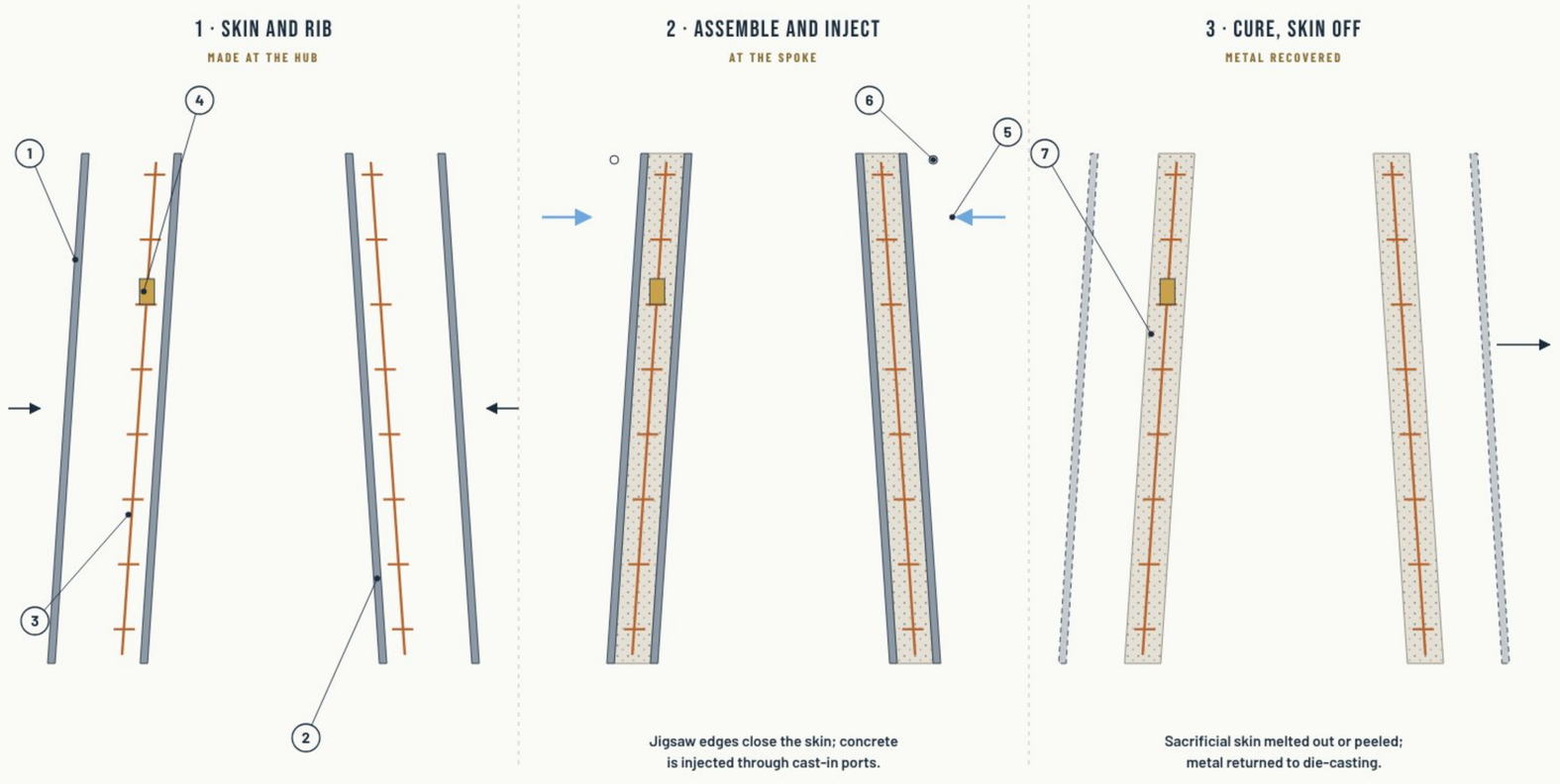

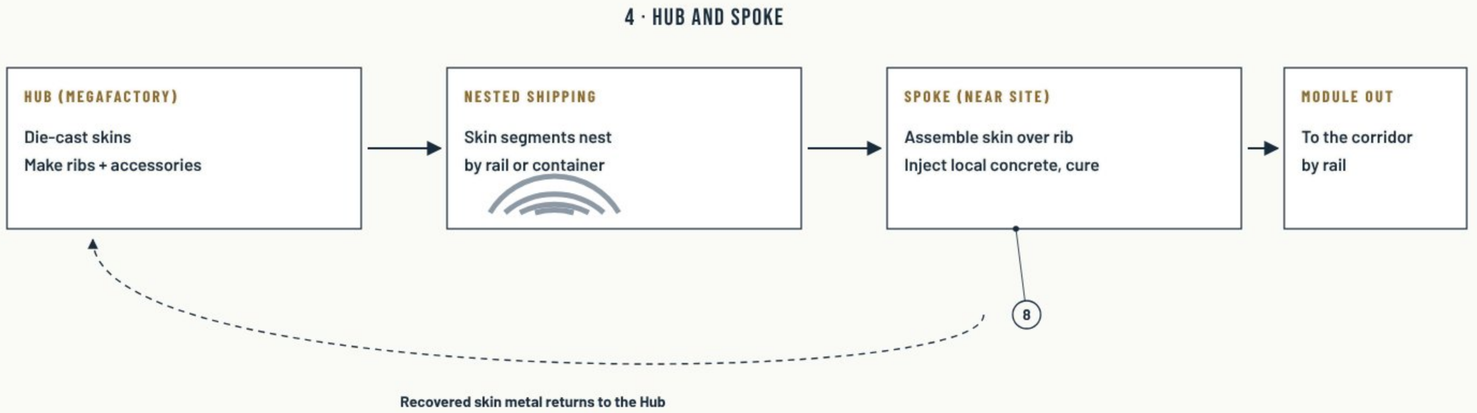

Precast concrete · Skin (die-cast metal) · Rib (reinforcement) · Embedded accessory · Concrete injection

SUMMARY

SKIN, RIB AND DIE

- Every precast part is made one way: a die-cast metal skin closes over a rib, and concrete is injected between them.
- The rib carries the reinforcement and every embedded part (ducts, couplers, inserts), fixed at set positions.
- Skins and ribs are made at the Hub (Megafactory) and shipped nested to Spokes near the work.
- The Spoke assembles the skin over the rib and injects local concrete. The jigsaw skin edges either close or they do not: no precision tools needed at the Spoke.
- After cure the skin comes off; sacrificial skin metal goes back to die-casting.

PATENTS P7 · P4, P5

CALLOUTS

1. Outer skin, die-cast metal
2. Inner skin (core)
3. Rib: reinforcement
4. Accessory fixed to the rib
5. Injection port
6. Air-removal port
7. Finished pylon joint
8. Same tolerance as the Hub: set by the metal parts

MULTI-MODAL CORRIDORS · MMC-DWG-003-14 · MANUFACTURE: SKIN, RIB AND DIE

Schematic — not to scale unless dimensioned · Patent P7
Rev C · 21 Nov 2026 · BB (Boh Brett) Murrell

MMC-DWG-003-15 · TRANSMISSION LINE: MMC-TA BUILD STEPS

CONSTRUCTION SHEET 15 · DUAL-TOWER PORTAL · TWO PYLONS ~13.5 M APART · ONE CROSS-BEAM AT 55 M · NEXT PORTAL 200 M AWAY · OPTION: SECOND CROSS-BEAM · SCHEMATIC

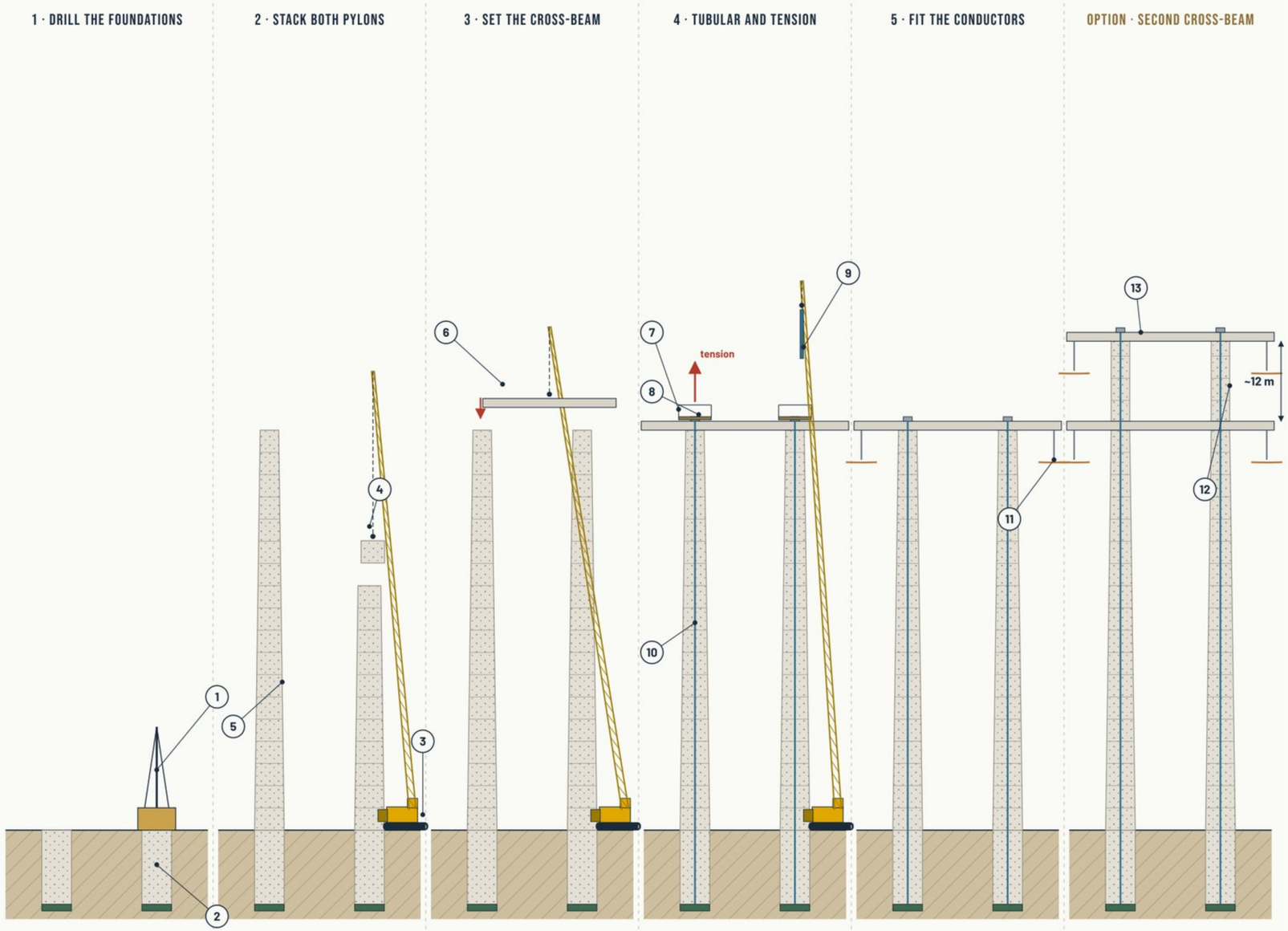

Both pylons are stacked first; the cross-beam is set across their tops, and the tension locks clamp it down. The next portal is 200 m along the line.

Precast concrete · Cross-beam · Tension tubular · Tension lock · Cutter head · Crane · Conductor

SUMMARY

MMC-TA BUILD STEPS

- 1 · The rig drills two caissons about 13.5 m apart; the cutter heads stay at depth as the anchors.
- 2 · A crawler crane stacks the pylon joints on both caisson heads to the top, 54 m.
- 3 · The cross-beam is lifted and set across both pylon tops, its holes over the pylon cores.
- 4 · From a work platform on the beam, the crane-lifted ~12 m tubular sections are screwed together and run in, as on a drill rig; latched, tensioned and held by the tension lock on the beam.
- 5 · Insulators and the two pole conductors are fitted at the beam ends.
- Portals are 200 m apart: 5 per km.
- Option: pylon joints are stacked on above the first beam and a second cross-beam is set on top, for a second bipole. The tubulars run from the top beam through both beams; the first beam is clamped between pylon joints. Spacing ~12 m (indicative); detailed design.

PATENTS P6 · P1–P4

CALLOUTS

1. Drilling rig (mobile, or dual rig on rail)
2. ATS caisson and cutter head, one per pylon
3. Crawler crane
4. Pylon joint on the hook
5. Pylon joints, 4 m to 2.5 m
6. Cross-beam, lowered onto both pylon tops
7. Work platform on the beam
8. Tension lock on the beam
9. Tubular section (~12 m) on the hook
10. Tension tubular through the beam, latched
11. Insulators and pole conductor
12. Option: pylon joints above the first beam, 2.5 m
13. Option: second cross-beam (second bipole)

MULTI-MODAL CORRIDORS · MMC-DWG-003-15 · MMC-TA BUILD STEPS

Schematic — not to scale unless dimensioned · Patents P1–P4, P6
Rev E · 12 Nov 2026 · BB (Boh Brett) Murrell

MMC-DWG-003-16 · PIPELINE INSTALL, SERVICES DECK

DEMONSTRATIVE, NOT DETAILED DESIGN · MMC-VD SERVICES DECK +19 M · DRIVE ROLLERS MOVE THE PIPE, PUSH UNIT AT THE LAUNCH STATION · SPOOLS ON A LAY TRAIN

A · SIDE ELEVATION: LAUNCH STATION AT DECK LEVEL; DRIVE ROLLERS MOVE THE STRING

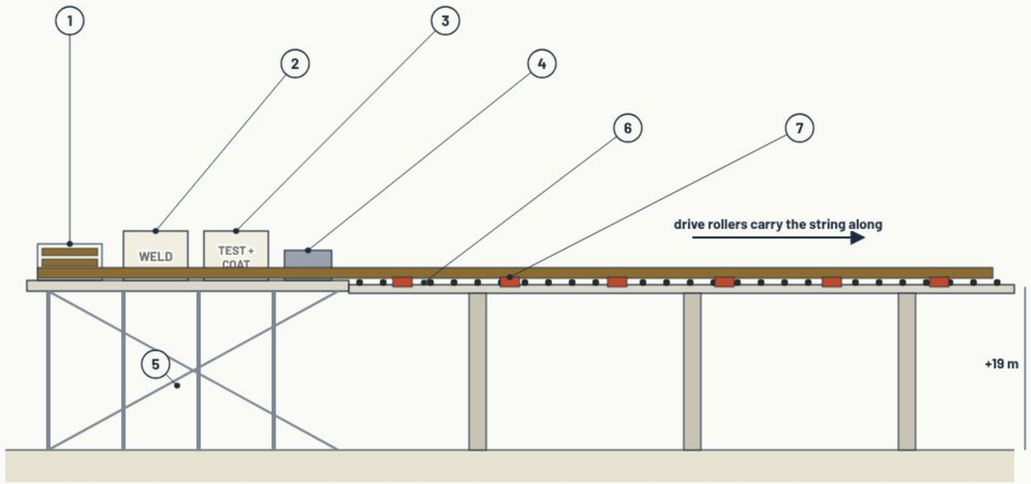

B · SECTION: SERVICES DECK, +19 M

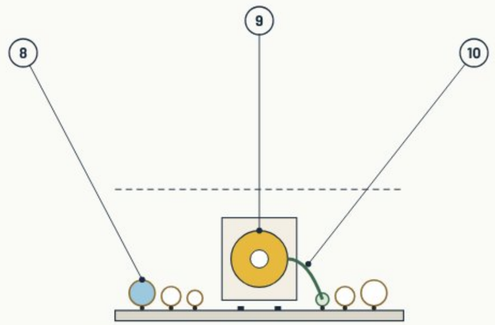

Left to right: water, gas, liquid fuels | fibre, hydrogen, spare

Deck ~11 m wide · 4.7 m clear to the beam above (002-08)

E · DRIVE ROLLER UNIT (DETAIL)

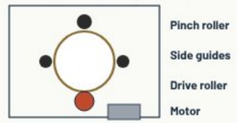

C · PLAN OF THE SERVICES DECK: LAY TRAIN ON THE CENTRE TRACK, STRINGS ON THE ROLLER LINES

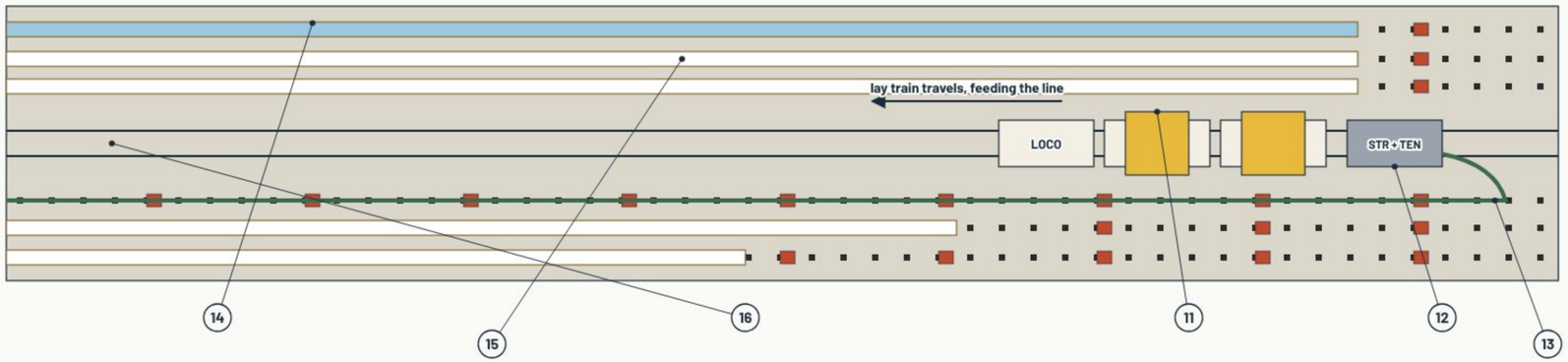

D · LINE BY LINE (SIZES FROM 002-08)

Line	Size	Installed by
Water	1.0 m	Welded strings, launch station
Gas	0.75 m	Welded strings, launch station
Liquid fuels	0.6 m	Welded strings, launch station
Hydrogen	0.75 m	Welded strings, launch station
Fibre	duct 0.5 m	Spools on the lay train
Spare	1.0 m	Either, by line

Spools take pipe up to about 0.5 m: steel reeled to 20 in, composite to 8 in.

Larger lines go in as welded strings from the launch station.

Drive rollers move both; the push unit adds thrust at the start: push and drive.

Steel pipe string · Fibre (spooled) · Spool · Drive roller unit · Idler roller · Services deck

SUMMARY

PIPELINE INSTALL, SERVICES DECK

- Demonstrative, not detailed design. Pipelines are installed at deck level on the MMC-VD services deck (+19 m): nothing is lifted pipe by pipe from the ground. MMC proposal.
- Large lines (water, gas, liquid fuels, hydrogen; 0.6–1.0 m): 12 m joints come up by the service rail to a launch station at the section end, are welded, tested and coated, and added to the string.
- Push and drive: drive roller units along the deck grip the pipe and move it; the push unit at the launch station starts each string and adds thrust. Each drive unit moves only its own length of string, so no single machine carries the whole load.
- Spooled lines: a lay train on the service rail carries spools; each line passes a straightener and tensioner and is fed sideways onto its rollers as the train moves. Published reel limits: steel to 20 in (~0.5 m), composite to 8 in; so on MMC-VD the fibre duct is spooled.
- The same rollers carry both, and stay in place for inspection and repair: a line can be driven back to the launch station.
- Joint length, roller spacing, drive positions and station layout are assumed; detailed design.

PATENTS P1 · P4 · P5 · P7

CALLOUTS

1. Joint rack: 12 m joints by service rail
2. Welding booth
3. Weld test and joint coating
4. Push unit: starts the string, adds thrust
5. Launch station frame at the section end
6. Idler rollers along the deck
7. Drive roller units: they move the pipe
8. Line on its rollers
9. Spool wagon on the service rail
10. Fibre fed sideways onto its rollers
11. Spool wagons on the service rail
12. Straightener and tensioner
13. Line fed onto its rollers
14. Drive roller units at intervals
15. Strings from the launch station
16. Service rail, centre track

MULTI-MODAL CORRIDORS · MMC-DWG-003-16 · PIPELINE INSTALL, SERVICES DECK

Schematic — not to scale unless dimensioned · P1 · P4 · P5 · P7

Rev D · 21 Nov 2026 · BB (Boh Brett) Murrell

MMC-DWG-004-01 · SOLID CAISSON RING

CAISSON TYPES · SHEET 1 · SUMMARY · ONE-PIECE RING · SOLID-RING PACKER · COUPLED TO THE TUBULAR

A · PLAN

ONE-PIECE PRECAST RING

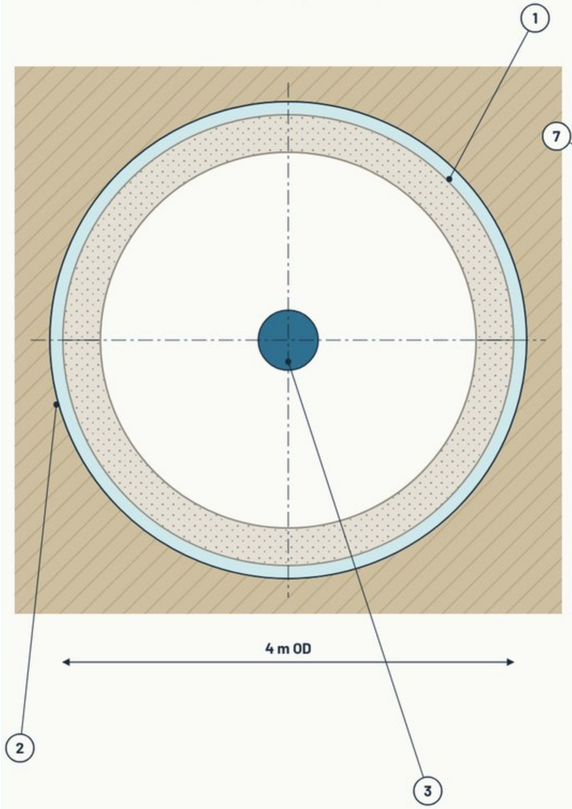

No joints around the ring:
the bore is a sealed shell.

B · PACKER SET INSIDE

SLIPS GRIP THE CONCRETE FACE

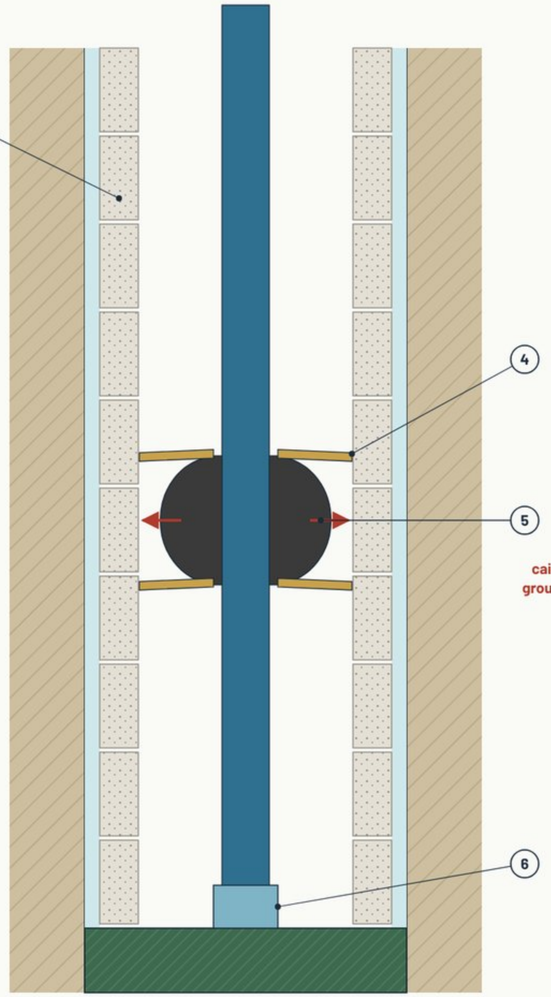

Set at a chosen depth;
radial force onto the inside face.

C · COUPLED

PACKER LOCKS ONTO THE TUBULAR

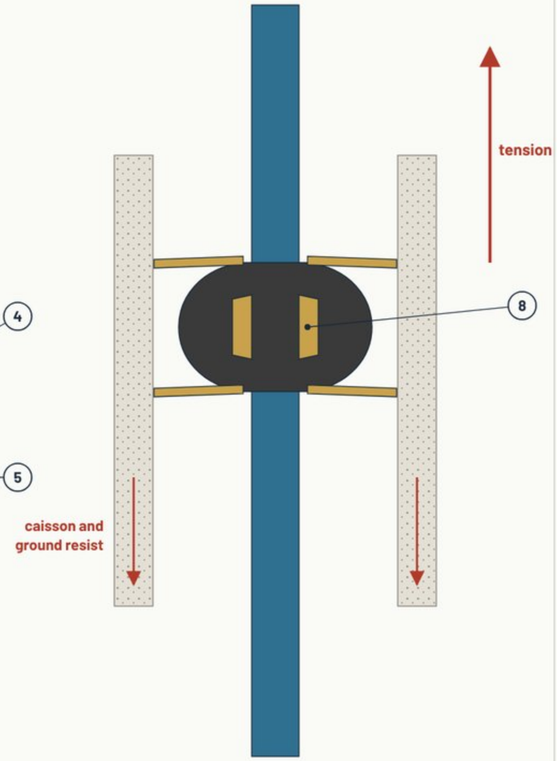

With the anchor latched, the packer
ties the caisson to the tension
column: added tensile strength.

SUMMARY

SOLID CAISSON RING

- One-piece precast concrete ring, 4 m outside diameter; the standard caisson.
- The stack follows the cutter head down the bore; its weight holds it at depth. Grout is optional, by ground (see sheet 001-03).
- A solid-ring expansion packer can be set at a chosen depth, its slips gripping the inside concrete face.
- Once the anchor is latched, the packer locks onto the tubular, coupling the caisson to the tension column.
- Further caisson types are added to this set as they are designed.

PATENTS P1 · P2 · P7

CALLOUTS

1. Solid ring
2. Grout annulus (optional)
3. Tension tubular
4. Slips on concrete
5. Packer element
6. Anchor latched in the cutter head
7. Solid rings
8. Inner slips grip the tubular

Precast concrete · Grout · Tension tubular · Anchor latch · Packer element · Slips · Cutter head · Loads

MULTI-MODAL CORRIDORS · MMC-DWG-004-01 · SOLID CAISSON RING

Schematic — not to scale unless dimensioned · Patents P1, P2, P7
Rev B · 10 Nov 2026 · BB (Boh Brett) Murrell

MMC-DWG-004-02 · SEGMENTED CAISSON RING

CAISSON TYPES · SHEET 2 · SUMMARY · RING IN SEGMENTS · DRIVEN OUT BY THE PACKER · RADIAL FORCE TO AXIAL RESTRAINT

A · PLAN: RUN IN

SEGMENTS CLOSED

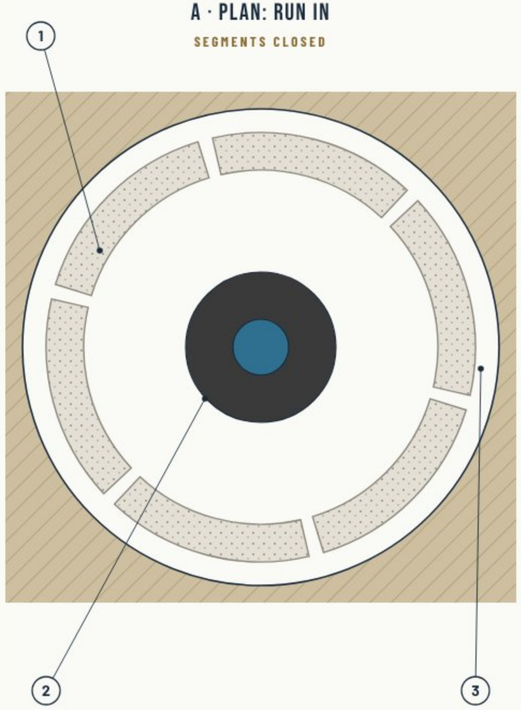

Gap between ring and bore wall.

B · PLAN: PACKER SET

SEGMENTS DRIVEN OUT

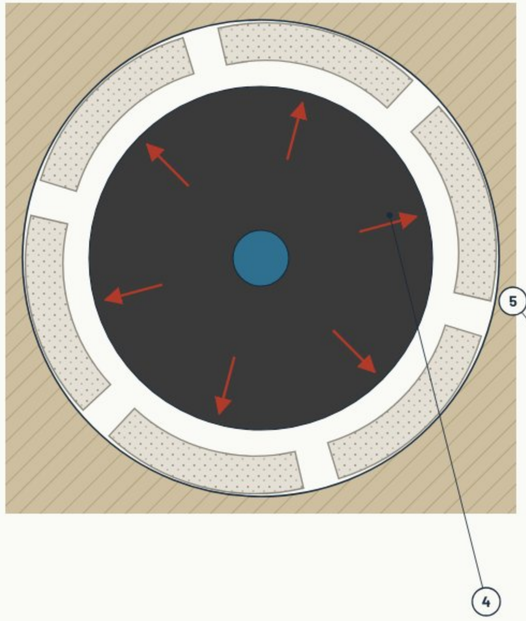

Joints open; segments bear hard on the bore wall.

C · SECTION

RADIAL FORCE TO AXIAL RESTRAINT

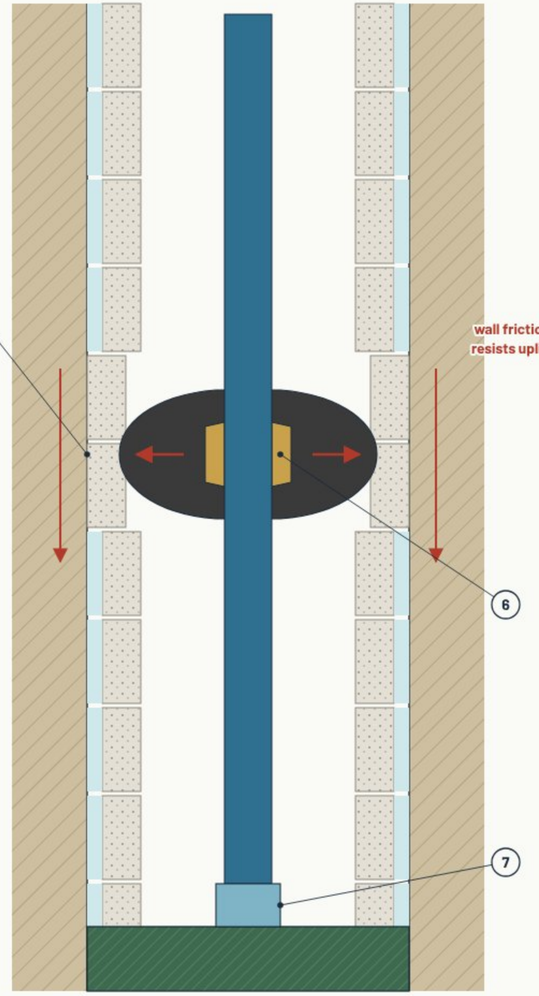

Optional, soil dependent: adds restraint; can couple it to the tension column.

SUMMARY

SEGMENTED CAISSON RING

- Precast ring made in segments, 4 m outside diameter, for foundations that need extra load transfer at depth.
- Run in closed. A segmented-ring expansion packer set at that depth drives the segments outward against the bore wall.
- The radial force becomes axial restraint through friction on the wall. The packer is optional and soil dependent; the weight of the caisson holds it at depth.
- Once the anchor is latched, the packer can also lock onto the tubular, coupling the caisson to the tension column.
- Six segments per ring. Joint detail between segments not yet set.

PATENTS P1 · P2 · P7

CALLOUTS

1. Ring segment
2. Packer, unset
3. Bore wall
4. Packer element, expanded
5. Segments on the bore wall
6. Inner slips lock onto the tubular
7. Anchor latched

Precast concrete · Grout · Tension tubular · Anchor latch · Packer element · Slips · Cutter head · Loads

MULTI-MODAL CORRIDORS · MMC-DWG-004-02 · SEGMENTED CAISSON RING

Schematic — not to scale unless dimensioned · Patents P1, P2, P7
Rev C · 21 Nov 2026 · BB (Boh Brett) Murrell

MMC-DWG-004-03 · CASTELLATED CAISSON RING

CAISSON TYPES · SHEET 3 · SUMMARY · DOG-CLUTCH FACES · TOOTH DETAIL · TORQUE THROUGH THE STACK

A · TWO RINGS ENGAGED

ELEVATION · 2.0 M RINGS · 4 M OD

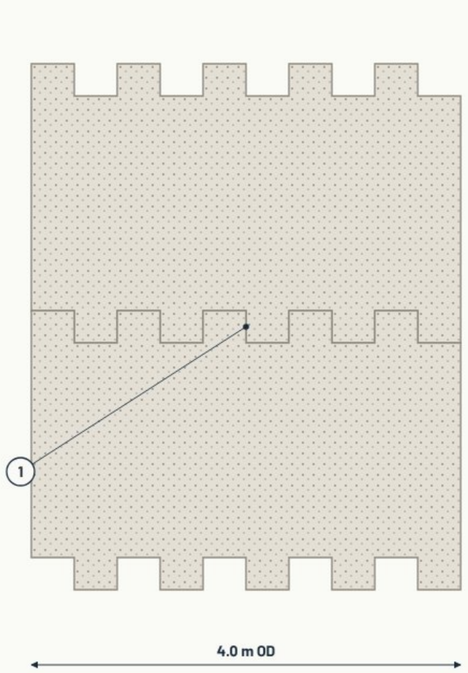

Upper ring teeth sit in the gaps of the ring below: a dog clutch.

B · TOOTH DETAIL

ONE TOOTH IN ITS SOCKET

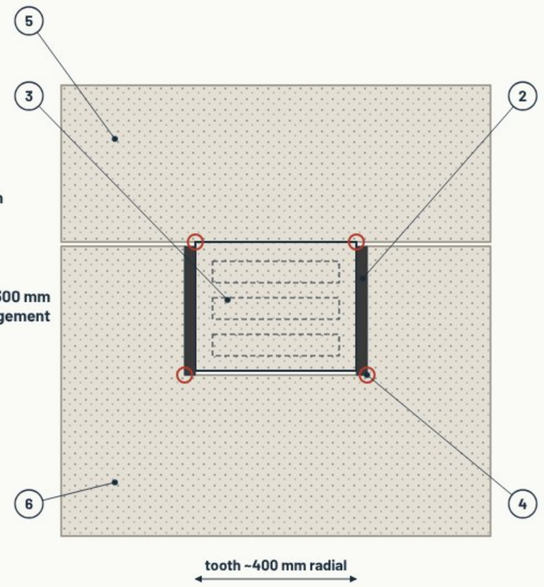

Zero-draft vertical faces: no cam-out under torque.

C · PLAN OF A RING FACE

10 TEETH AT 36°

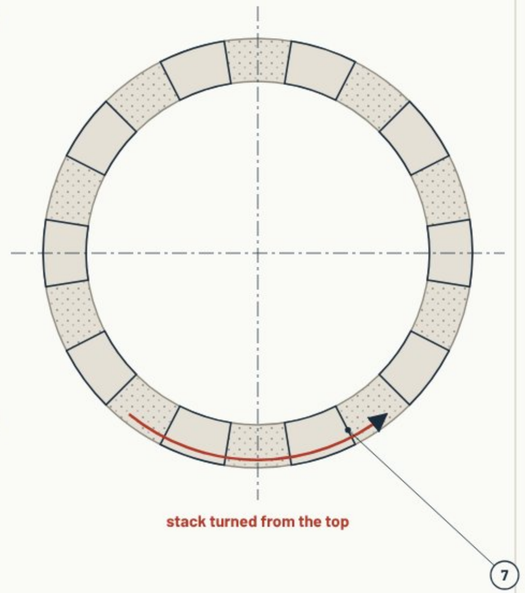

Torque passes ring to ring through the teeth.

Precast concrete · Torque shim · Roots / torque

SUMMARY

CASTELLATED CAISSON RING

- Precast ring, 4.0 m OD, 2.0 m tall, with integral concrete teeth on its top and bottom faces.
- Adjacent rings interlock as a dog clutch, so the stack can be turned from the top to break skin friction as it follows the cutter head down.
- Teeth: 8–12 per face, 10 typical at 36°; about 400 mm wide and 300 mm deep.
- Detailing: radiused roots, elastomeric torque shims, zero-draft faces, closed-loop confinement ties.
- The lead ring has a flat bearing base on the cutter head (no teeth there). Tooth figures from Memo 13; ring height 2.0 m (Memo 13 gives 1.8 m).
- Either face type goes on a solid or a segmented ring (004-01, 004-02).

PATENTS P1 · P2 · P7

CALLOUTS

1. Joint: teeth interlock
2. Elastomeric torque shim
3. Closed-loop confinement ties
4. Radiused roots (50–75 mm)
5. Upper ring
6. Lower ring
7. Tooth (raised)

MULTI-MODAL CORRIDORS · MMC-DWG-004-03 · CASTELLATED CAISSON RING

Schematic — not to scale unless dimensioned · Patents P1, P2, P7 · Memo 13
Rev E · 21 Nov 2026 · BB (Boh Brett) Murrell

MMC-DWG-004-04 · FLUSH CAISSON RING

CAISSON TYPES · SHEET 4 · SUMMARY · FLAT FACES · NO ROTATION · SIMPLE INSTALLS

A · TWO RINGS STACKED

ELEVATION · FLAT FACES, NO TEETH

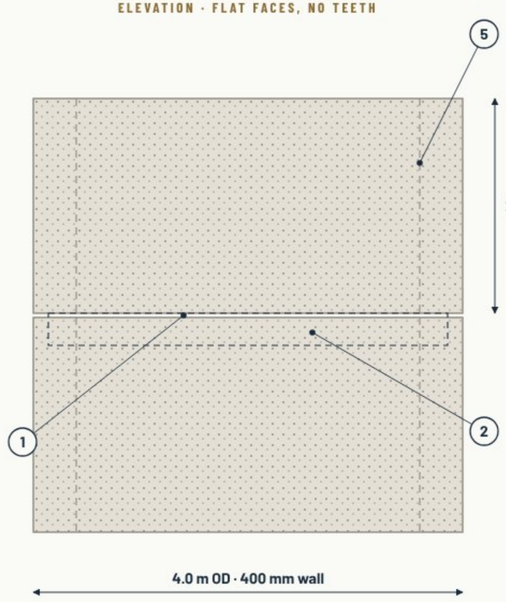

Flush faces, located male to female.
No teeth, so no torque across the joint.

Joint detail: section through the wall

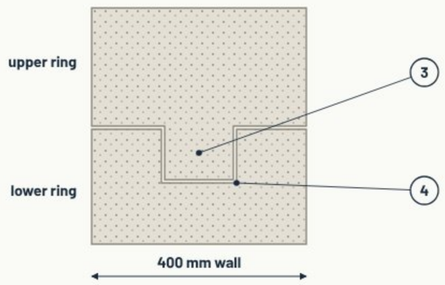

B · IN THE BORE

STACK FOLLOWS DOWN, NOT TURNED

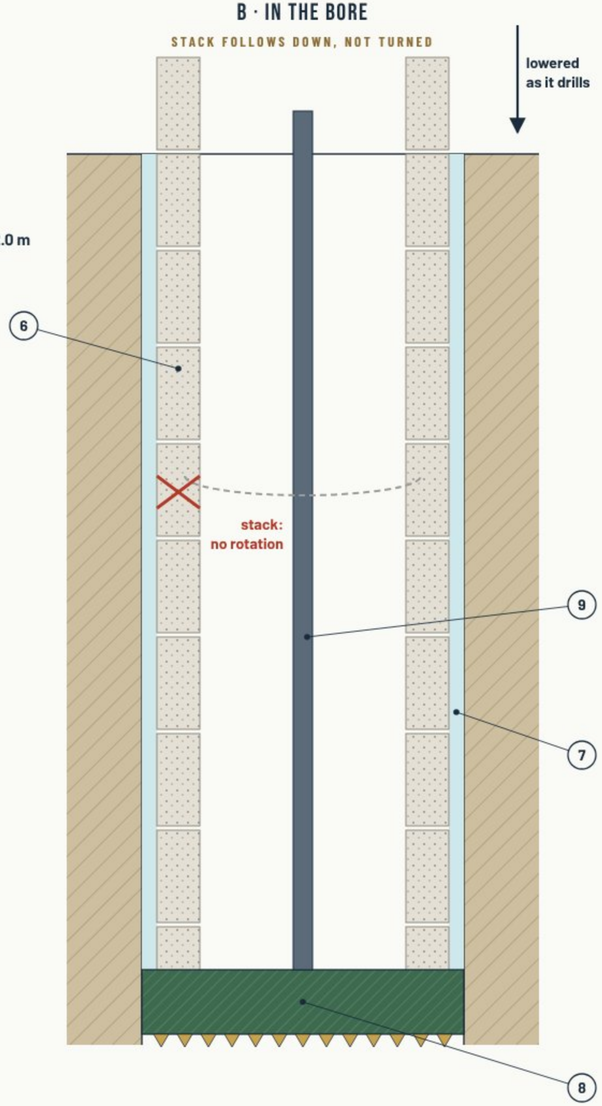

C · WHICH RING

JOINT FACE TYPES

Castellated (004-03)



Teeth on both faces
Stack can be turned
to break skin friction

Flush (004-04)

Flat faces, male to female
Stack is not turned
Simple installs where
no rotation is needed

SUMMARY

FLUSH CAISSON RING

- Precast ring, 4.0 m OD, 2.0 m tall, 400 mm wall, with flat top and bottom faces: no teeth.
- For simple installs where no rotation is needed: the stack follows the cutter head down without being turned.
- No torque passes ring to ring.
- Rings locate male to female: a spigot on one face fits a socket in the next.
- Either face type goes on a solid or a segmented ring (004-01, 004-02).

PATENTS P1 · P2 · P7

CALLOUTS

1. Flush joint
2. Male spigot into female socket (hidden)
3. Male spigot
4. Female socket
5. Bore (hidden line)
6. Flush rings
7. Grout annulus (optional)
8. Cutter head
9. Drill pipe

Precast concrete · Grout · Drill pipe · Cutter head · Cutters · No rotation

MULTI-MODAL CORRIDORS · MMC-DWG-004-04 · FLUSH CAISSON RING

Schematic — not to scale unless dimensioned · Patents P1, P2, P7
Rev E · 21 Nov 2026 · BB (Boh Brett) Murrell

MMC-DWG-005-01 · MMC-VC MODULAR COMPONENTS

MODULAR COMPONENTS · SINGLE-DECK VIADUCT AS BUILT · STANDARD DESIGN · EVERY PART IS A STANDARD MMC COMPONENT · QUANTITIES PER PYLON AND PER KM

DETAIL 2 · TOP OF A LEG (ENLARGED)

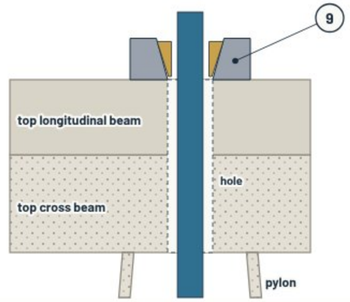

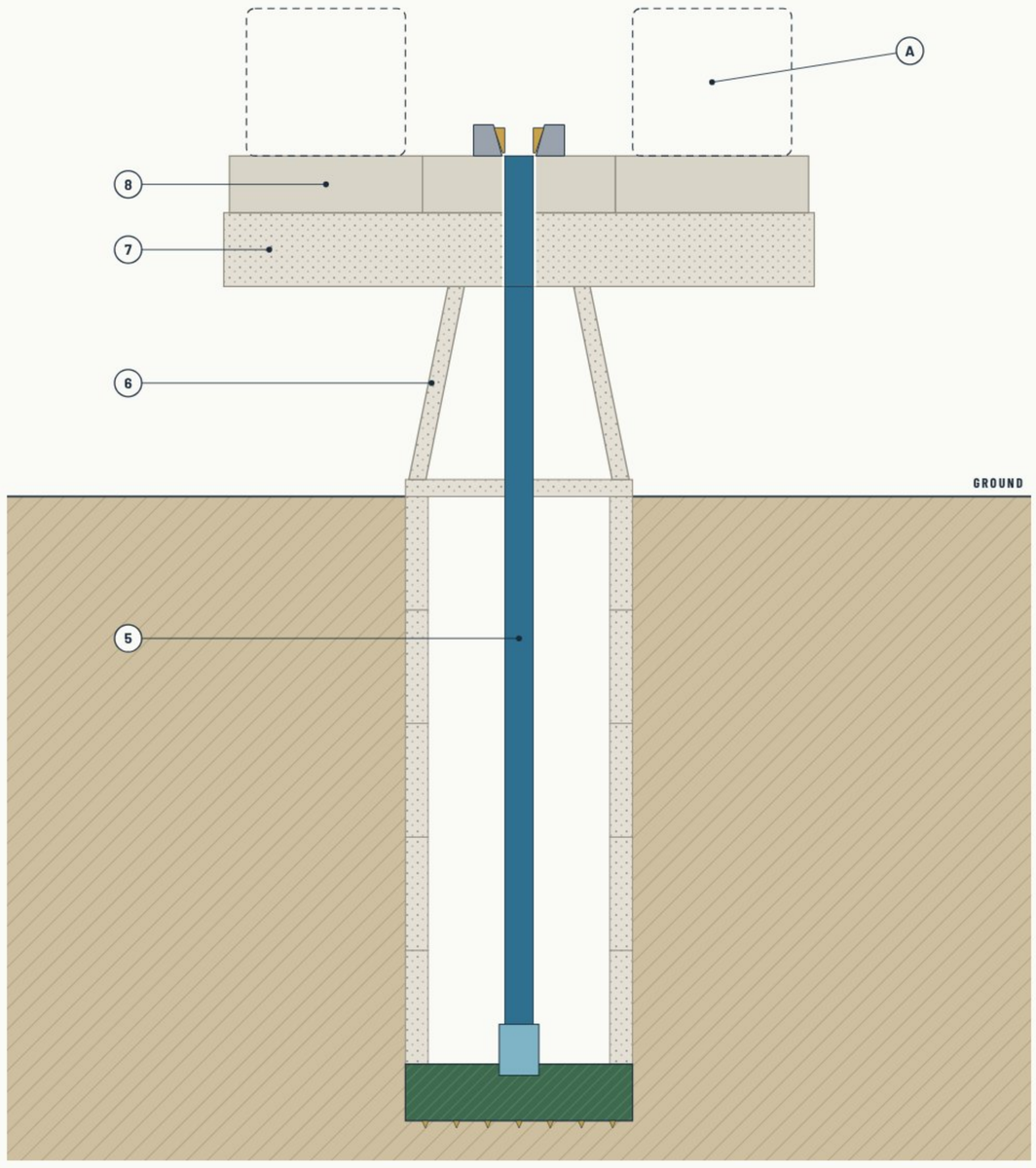

DETAIL 1 · FOUNDATION (ENLARGED)

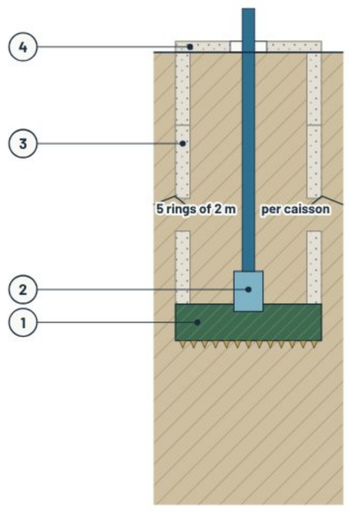

Precast concrete · Tension tubular · Anchor latch · Cutter head · Slip bowl / rail

SUMMARY

MMC-VC — MODULAR COMPONENTS

- Every part on this sheet is a standard MMC part, made on the same production line as every other model.
- A different model uses more or fewer of the same parts, not different ones.
- 40 pylons per km (25 m spans).
- Pylons 4 m at the base to 2.5 m at the top; pylon joint masses estimated on that taper. Detailed design needed.

PATENTS P1 · P2 · P4 · P7

BILL OF MATERIALS · PER PYLON · PER KM · MASS

1. Cutter head (cast high-alloy steel, bit inserts): 1 / pylon · 40 / km · detailed design
2. Anchor latch: 1 / pylon · 40 / km · mass not set
3. Caisson rings (2 m): 5 / pylon · 200 / km · ~113.1 t / pylon *
4. Caisson head: 1 / pylon · 40 / km · ~8.8 t / pylon
5. Tension tubular, ~12 m sections (16 m per leg): 2 / pylon · 80 / km · ~1.7 t / pylon
6. Pylon joints (~3 m): 2 / pylon · 80 / km · ~22.9 t / pylon *
7. Cross beams: 1 / pylon · 40 / km · ~17 t / pylon
8. Longitudinal beams (25 m, per span): 3 / pylon · 120 / km · ~216 t / pylon
9. Tension lock (slips in the top beam): 1 / pylon · 40 / km · mass not set

Concrete in parts with a set mass: ~378 t / pylon · tubular steel ~1.7 t / pylon

Total dead load per span (structure + services): ~380 t

SERVICES CARRIED

A. Maglev guideways (2)

* rests on a stated assumption (see the web page)

MULTI-MODAL CORRIDORS · MMC-DWG-005-01 · MMC-VC MODULAR COMPONENTS

Schematic — not to scale unless dimensioned · P1 · P2 · P4 · P7
Rev H · 21 Nov 2026 · BB (Boh Brett) Murrell

MMC-DWG-005-02 · MMC-VB MODULAR COMPONENTS

MODULAR COMPONENTS · TWO-LEVEL VIADUCT AS BUILT · STANDARD DESIGN · EVERY PART IS A STANDARD MMC COMPONENT · QUANTITIES PER PYLON AND PER KM

DETAIL 2 · TOP OF A LEG (ENLARGED)

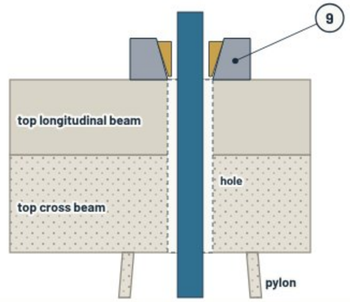

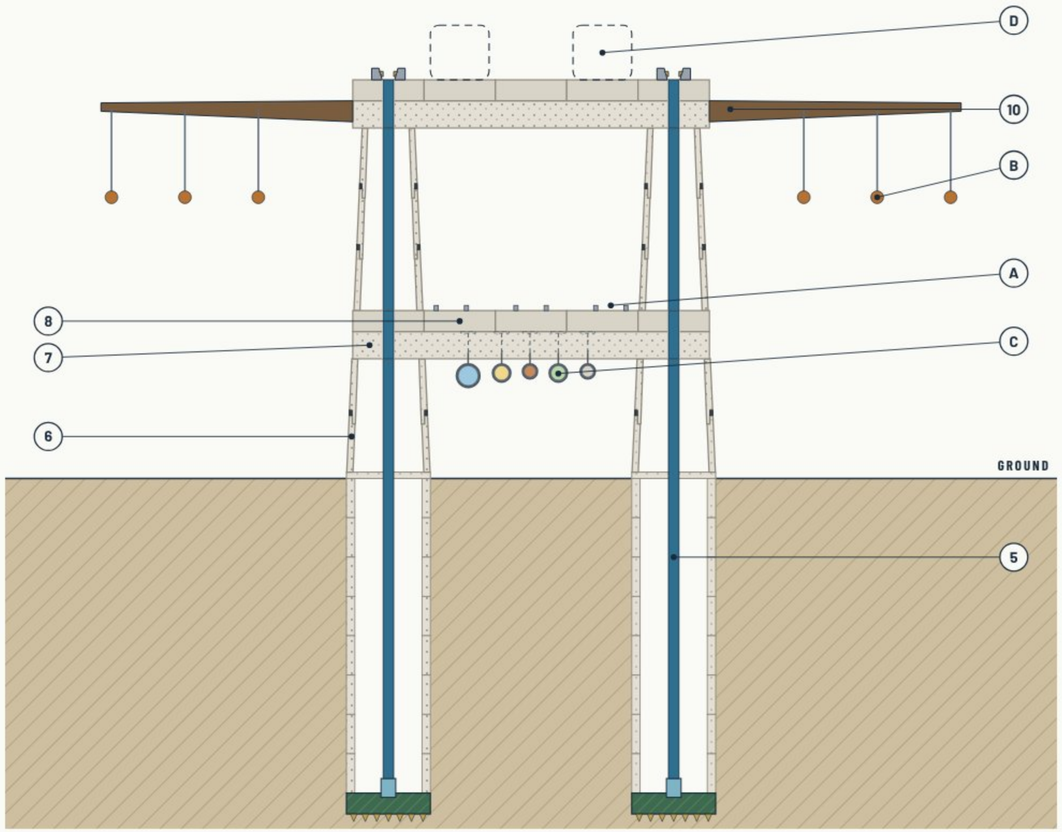

DETAIL 1 · FOUNDATION (ENLARGED)

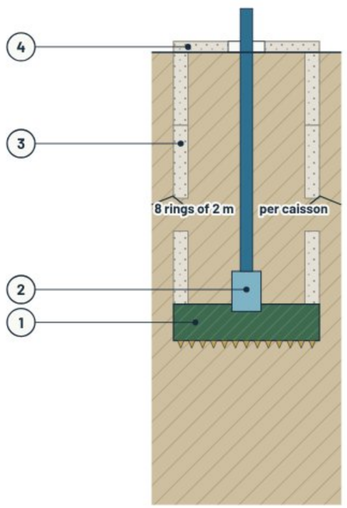

SUMMARY

MMC-VB — MODULAR COMPONENTS

- Every part on this sheet is a standard MMC part, made on the same production line as every other model.
- A different model uses more or fewer of the same parts, not different ones.
- 40 pylons per km (25 m spans).
- Pylons 4 m at the base to 2.5 m at the top; pylon joint masses estimated on that taper. Detailed design needed.

PATENTS P1 · P2 · P4 · P7

BILL OF MATERIALS · PER PYLON · PER KM · MASS

1. Cutter head (cast high-alloy steel, bit inserts): 2 / pylon · 80 / km · detailed design
2. Anchor latch: 2 / pylon · 80 / km · mass not set
3. Caisson rings (2 m): 16 / pylon · 640 / km · ~361.9 t / pylon *
4. Caisson head: 2 / pylon · 80 / km · ~17.7 t / pylon
5. Tension tubular, ~12 m sections (34 m per leg): 6 / pylon · 240 / km · ~17.3 t / pylon
6. Pylon joints (~3 m): 10 / pylon · 400 / km · ~184.2 t / pylon *
7. Cross beams: 2 / pylon · 80 / km · ~72 t / pylon
8. Longitudinal beams (25 m, per span): 10 / pylon · 400 / km · ~720 t / pylon
9. Tension lock (slips in the top beam): 2 / pylon · 80 / km · mass not set
10. HVDC arm modules: 6 / pylon · 240 / km · mass not set

Concrete in parts with a set mass: ~1,356 t / pylon · tubular steel ~17.3 t / pylon

Total dead load per span (structure + services + water): ~1,421 t

SERVICES CARRIED

- A Freight tracks (3)
- B HVDC arms, 3 conductors per side
- C Pipes in harnesses under the deck
- D Maglev guideways (2)

* rests on a stated assumption (see the web page)

Precast concrete · Tension tubular · Anchor latch · Cutter head · Slip bowl / rail · HVDC arm · Conductor · Water · Pipelines (colour by product)

MULTI-MODAL CORRIDORS · MMC-DWG-005-02 · MMC-VB MODULAR COMPONENTS

Schematic — not to scale unless dimensioned · P1 · P2 · P4 · P7
Rev K · 21 Nov 2026 · BB (Boh Brett) Murrell

MMC-DWG-005-03 · MMC-VA MODULAR COMPONENTS

MODULAR COMPONENTS · FIVE-LEVEL VIADUCT AS BUILT · STANDARD DESIGN · EVERY PART IS A STANDARD MMC COMPONENT · QUANTITIES PER PYLON AND PER KM

DETAIL 2 · TOP OF A LEG (ENLARGED)

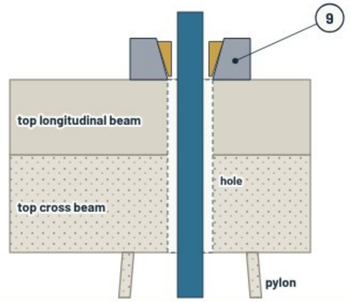

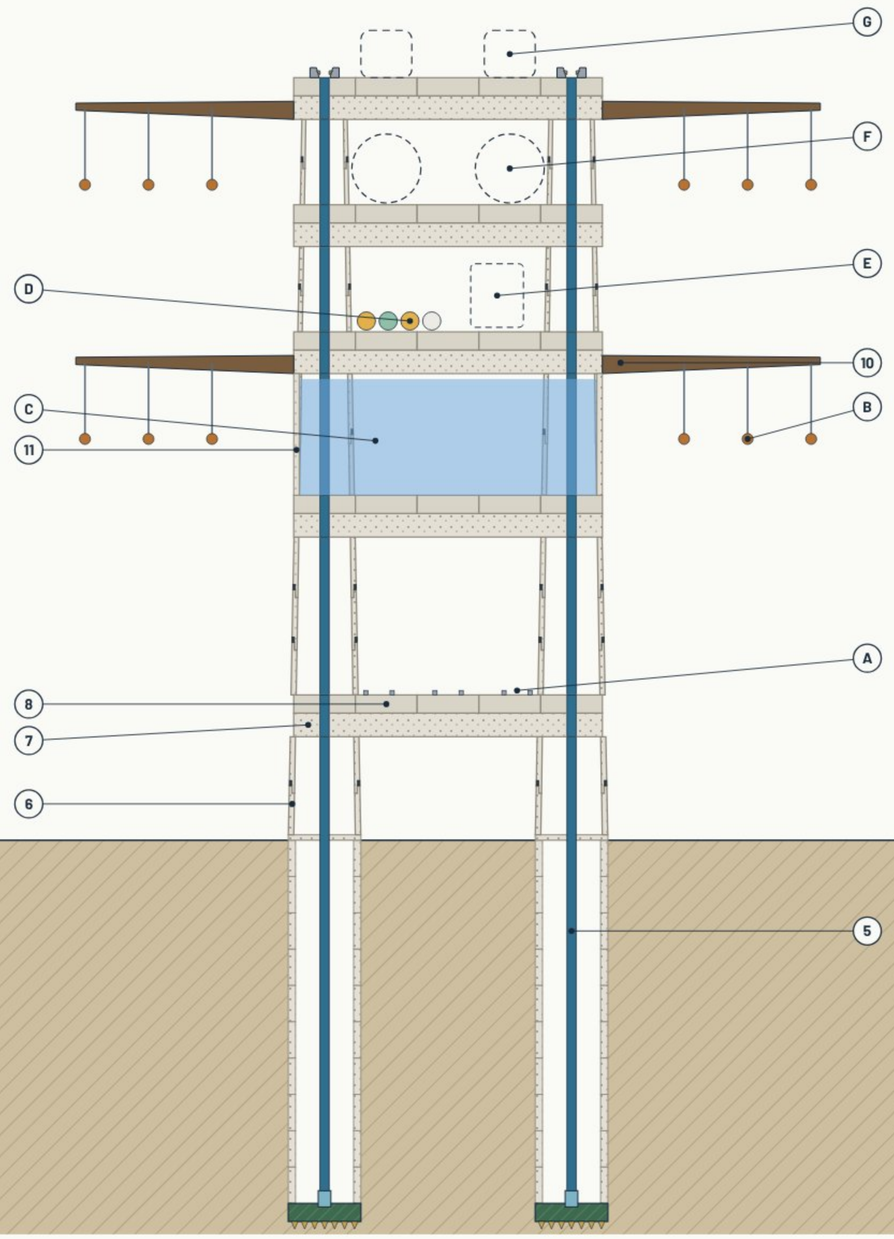

DETAIL 1 · FOUNDATION (ENLARGED)

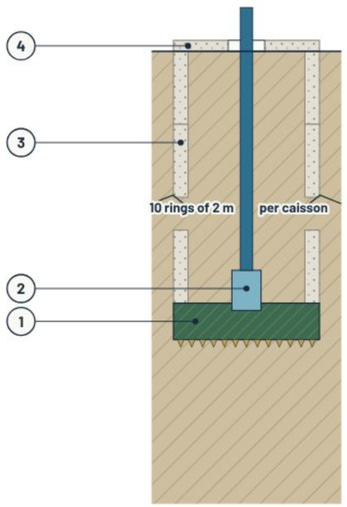

Precast concrete · Tension tubular · Anchor latch · Cutter head · Slip bowl / rail · HVDC arm · Conductor · Water · Pipelines (colour by product)

SUMMARY

MMC-VA — MODULAR COMPONENTS

- Every part on this sheet is a standard MMC part, made on the same production line as every other model.
- A different model uses more or fewer of the same parts, not different ones.
- 40 pylons per km (25 m spans).
- Pylons 4 m at the base to 2.5 m at the top; pylon joint masses estimated on that taper. Detailed design needed.

PATENTS P1 · P2 · P4 · P7

BILL OF MATERIALS · PER PYLON · PER KM · MASS

1. Cutter head (cast high-alloy steel, bit inserts): 2 / pylon · 80 / km · detailed design
2. Anchor latch: 2 / pylon · 80 / km · mass not set
3. Caisson rings (2 m): 20 / pylon · 800 / km · ~452.4 t / pylon *
4. Caisson head: 2 / pylon · 80 / km · ~17.7 t / pylon
5. Tension tubular, ~12 m sections (62 m per leg): 12 / pylon · 480 / km · ~31.6 t / pylon
6. Pylon joints (~3 m): 24 / pylon · 960 / km · ~375.2 t / pylon *
7. Cross beams: 5 / pylon · 200 / km · ~245 t / pylon
8. Longitudinal beams (25 m, per span): 25 / pylon · 1,000 / km · ~1,800 t / pylon
9. Tension lock (slips in the top beam): 2 / pylon · 80 / km · mass not set
10. HVDC arm modules: 12 / pylon · 480 / km · mass not set
11. Aqueduct channel wall panels (both sides, per span): 2 / pylon · 80 / km · detailed design *

Concrete in parts with a set mass: ~2,890 t / pylon · tubular steel ~31.6 t / pylon

Total dead load per span (structure + services + water): ~5,566 t

SERVICES CARRIED

- A Freight tracks (3)
- B HVDC arms, 3 conductors per side
- C Aqueduct channel, full bay
- D Services: pipelines, fibre
- E Service rail (standard gauge)
- F Hyperloop reservation (2 tubes)
- G Maglev guideways (2)

* rests on a stated assumption (see the web page)

MULTI-MODAL CORRIDORS · MMC-DWG-005-03 · MMC-VA MODULAR COMPONENTS

Schematic — not to scale unless dimensioned · P1 · P2 · P4 · P7
Rev K · 21 Nov 2026 · BB (Boh Brett) Murrell

MMC-DWG-005-07 · MMC-VD MODULAR COMPONENTS

MODULAR COMPONENTS · THREE-LEVEL VIADUCT AS BUILT · STANDARD DESIGN · EVERY PART IS A STANDARD MMC COMPONENT · QUANTITIES PER PYLON AND PER KM

DETAIL 2 · TOP OF A LEG (ENLARGED)

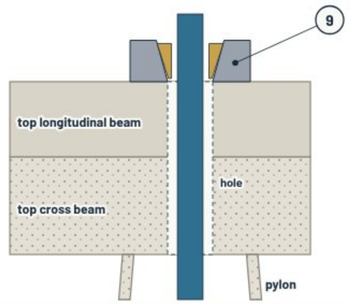

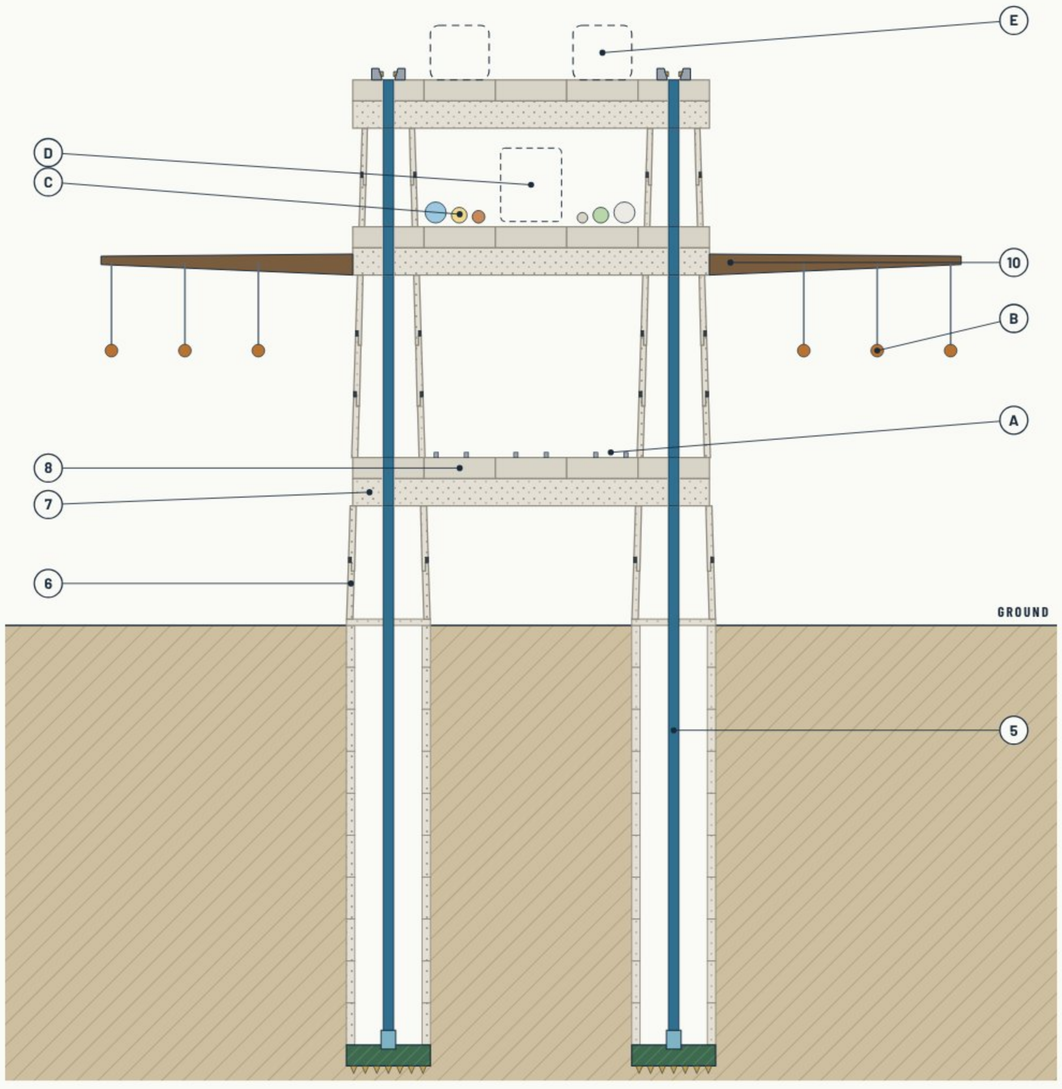

DETAIL 1 · FOUNDATION (ENLARGED)

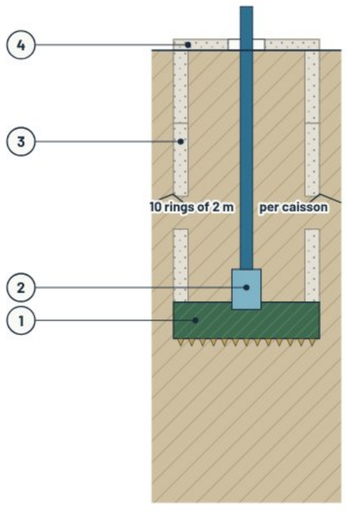

SUMMARY

MMC-VD — MODULAR COMPONENTS

- Every part on this sheet is a standard MMC part, made on the same production line as every other model.
- A different model uses more or fewer of the same parts, not different ones.
- 40 pylons per km (25 m spans).
- Pylons 4 m at the base to 2.5 m at the top; pylon joint masses estimated on that taper. Detailed design needed.

PATENTS P1 · P2 · P4 · P7

BILL OF MATERIALS · PER PYLON · PER KM · MASS

1. Cutter head (cast high-alloy steel, bit inserts): 2 / pylon · 80 / km · detailed design
2. Anchor latch: 2 / pylon · 80 / km · mass not set
3. Caisson rings (2 m): 20 / pylon · 800 / km · ~452.4 t / pylon *
4. Caisson head: 2 / pylon · 80 / km · ~17.7 t / pylon
5. Tension tubular, ~12 m sections (46 m per leg): 8 / pylon · 320 / km · ~23.4 t / pylon
6. Pylon joints (~3 m): 14 / pylon · 560 / km · ~243.8 t / pylon *
7. Cross beams: 3 / pylon · 120 / km · ~115 t / pylon
8. Longitudinal beams (25 m, per span): 15 / pylon · 600 / km · ~1,080 t / pylon
9. Tension lock (slips in the top beam): 2 / pylon · 80 / km · mass not set
10. HVDC arm modules: 6 / pylon · 240 / km · mass not set

Concrete in parts with a set mass: ~1,909 t / pylon · tubular steel ~23.4 t / pylon

Total dead load per span (structure + services + water): ~1,983 t

SERVICES CARRIED

- A Freight tracks (3)
- B HVDC arms, 3 conductors per side
- C Pipes on rollers, both sides
- D Service rail, centre track
- E Maglev guideways (2)

* rests on a stated assumption (see the web page)

Precast concrete · Tension tubular · Anchor latch · Cutter head · Slip bowl / rail · HVDC arm · Conductor · Water · Pipelines (colour by product)

MULTI-MODAL CORRIDORS · MMC-DWG-005-07 · MMC-VD MODULAR COMPONENTS

Schematic — not to scale unless dimensioned · P1 · P2 · P4 · P7
Rev C · 21 Nov 2026 · BB (Boh Brett) Murrell

MMC-DWG-005-04 · MMC-TB MODULAR COMPONENTS

MODULAR COMPONENTS · SINGLE-LEG TRANSMISSION TOWER AS BUILT · STANDARD DESIGN · EVERY PART IS A STANDARD MMC COMPONENT · QUANTITIES PER TOWER AND PER KM

DETAIL 2 · TOP OF A LEG (ENLARGED)

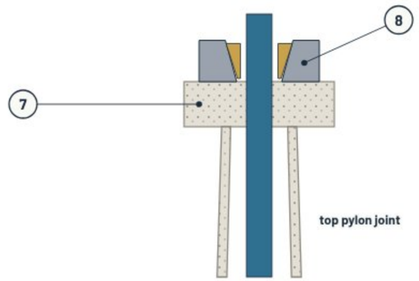

DETAIL 1 · FOUNDATION (ENLARGED)

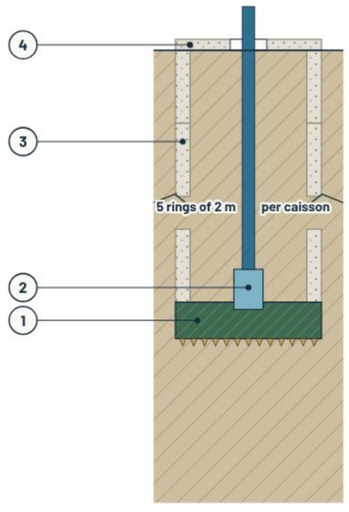

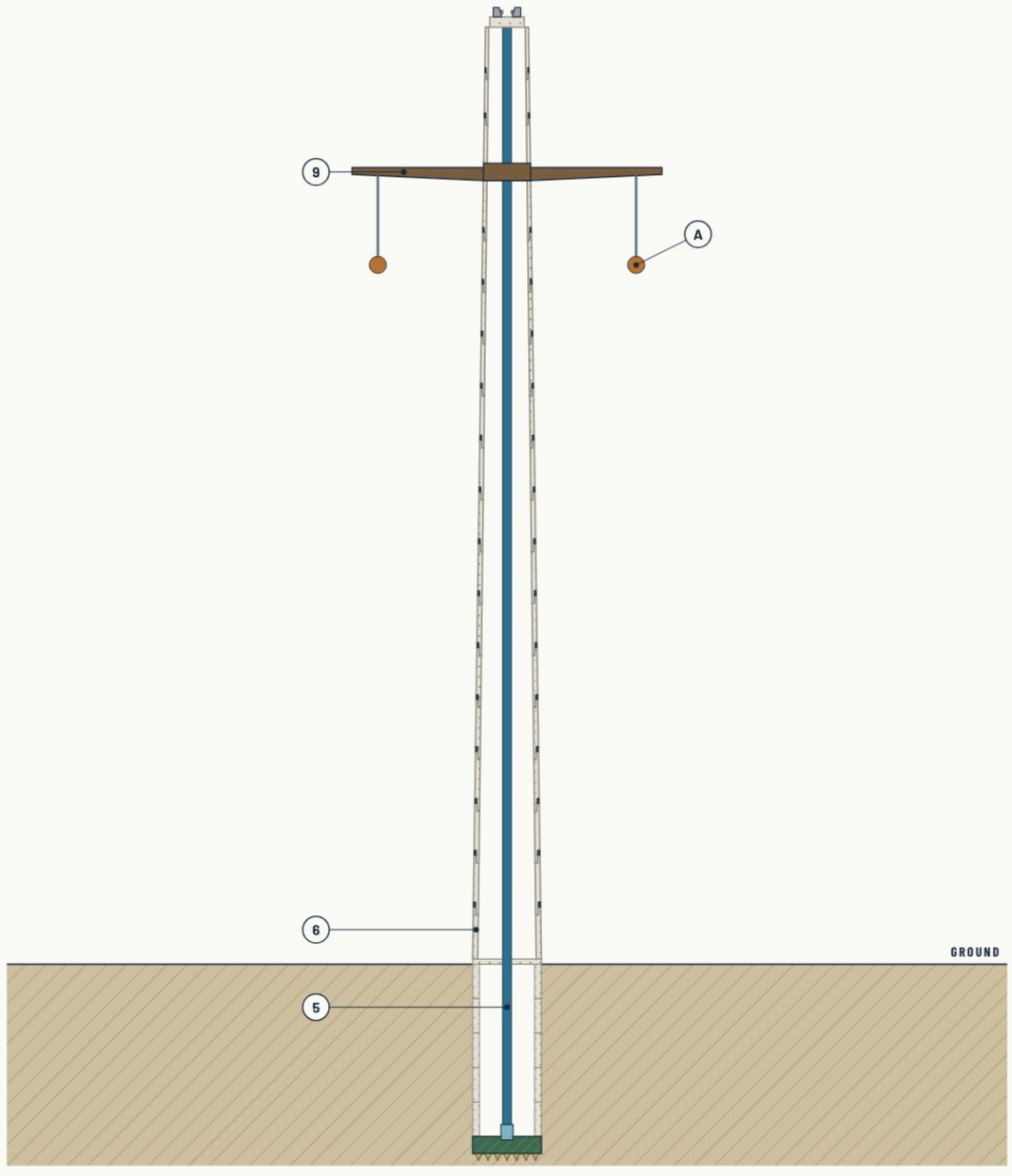

Precast concrete · Tension tubular · Anchor latch · Cutter head · Slip bowl / rail · Cross-arm · Conductor

SUMMARY

MMC-TB — MODULAR COMPONENTS

- Every part on this sheet is a standard MMC part, made on the same production line as every other model.
- A different model uses more or fewer of the same parts, not different ones.
- 5 towers per km (200 m apart).
- Pylons 4 m at the base to 2.5 m at the top; pylon joint masses estimated on that taper. Detailed design needed.

PATENTS P1 · P2 · P4 · P7

BILL OF MATERIALS · PER TOWER · PER KM · MASS

1. Cutter head (cast high-alloy steel, bit inserts): 1 / tower · 5 / km · detailed design *
2. Anchor latch: 1 / tower · 5 / km · mass not set *
3. Caisson rings (2 m): 5 / tower · 25 / km · ~113.1 t / tower *
4. Caisson head: 1 / tower · 5 / km · ~8.8 t / tower *
5. Tension tubular, ~12 m sections (65 m per leg): 6 / tower · 30 / km · ~16.5 t / tower *
6. Pylon joints (~3 m): 18 / tower · 90 / km · ~317.4 t / tower *
7. Pylon cap: 1 / tower · 5 / km · mass not set *
8. Tension lock (on the cap): 1 / tower · 5 / km · mass not set *
9. Captured cross-arm: 1 / tower · 5 / km · mass not set

Concrete in parts with a set mass: ~439 t / tower · tubular steel ~16.5 t / tower

SERVICES CARRIED

A. Insulators and conductors

* rests on a stated assumption (see the web page)

MULTI-MODAL CORRIDORS · MMC-DWG-005-04 · MMC-TB MODULAR COMPONENTS

Schematic — not to scale unless dimensioned · P1 · P2 · P4 · P7
Rev G · 21 Nov 2026 · BB (Boh Brett) Murrell

MMC-DWG-005-05 · MMC-TB GUYED MODULAR COMPONENTS

MODULAR COMPONENTS · GUYED TRANSMISSION TOWER AS BUILT · STANDARD DESIGN · EVERY PART IS A STANDARD MMC COMPONENT · QUANTITIES PER TOWER AND PER KM

DETAIL 2 · TOP OF A LEG (ENLARGED)

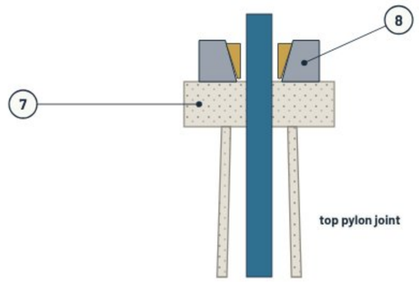

DETAIL 1 · FOUNDATION (ENLARGED)

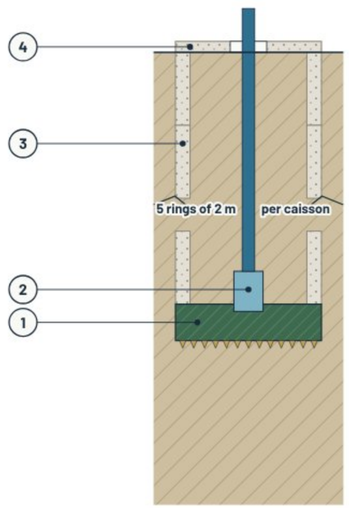

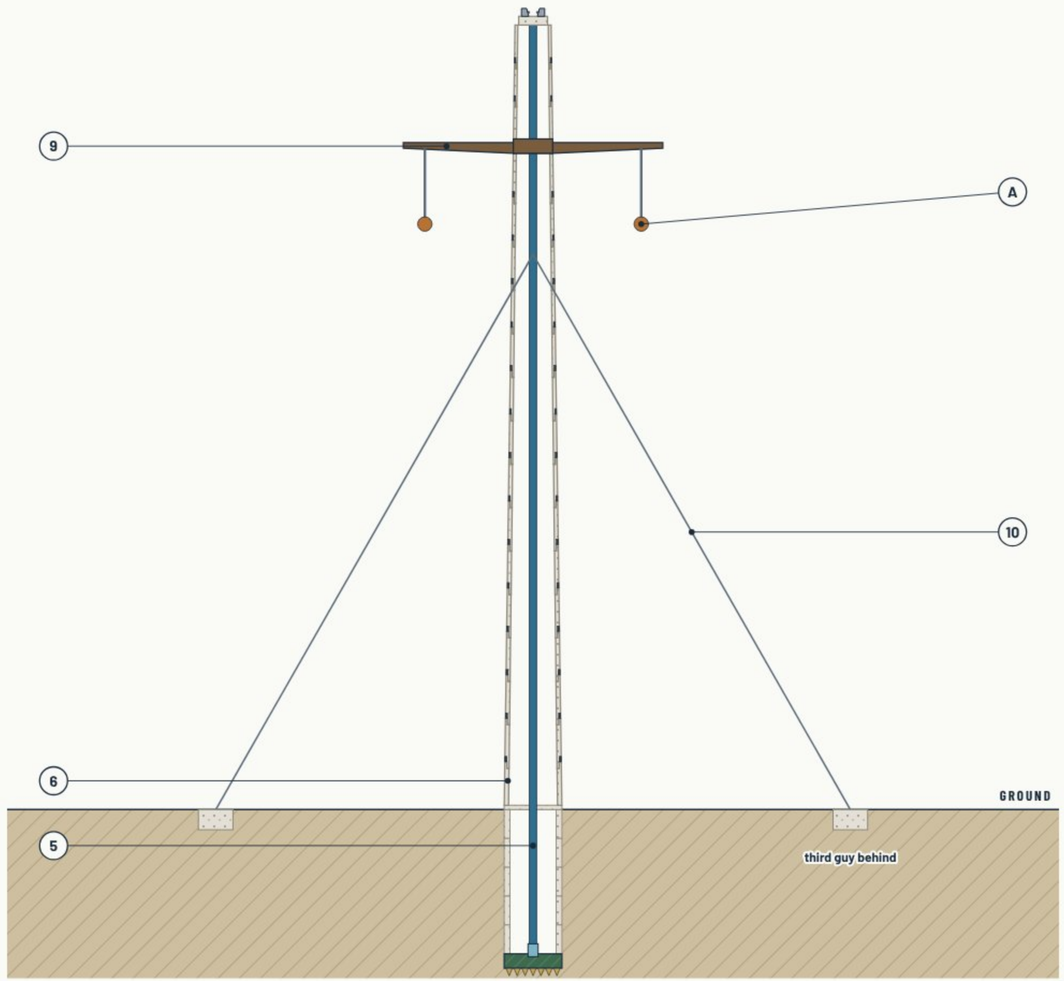

Precast concrete · Tension tubular · Anchor latch · Cutter head · Slip bowl / rail · Cross-arm · Conductor

SUMMARY

MMC-TB GUYED — MODULAR COMPONENTS

- Every part on this sheet is a standard MMC part, made on the same production line as every other model.
- A different model uses more or fewer of the same parts, not different ones.
- 5 towers per km (200 m apart).
- Pylons 4 m at the base to 2.5 m at the top; pylon joint masses estimated on that taper. Detailed design needed.

PATENTS P1 · P2 · P4 · P7

BILL OF MATERIALS · PER TOWER · PER KM · MASS

1. Cutter head (cast high-alloy steel, bit inserts): 1 / tower · 5 / km · detailed design *
2. Anchor latch: 1 / tower · 5 / km · mass not set *
3. Caisson rings (2 m): 5 / tower · 25 / km · ~113.1 t / tower *
4. Caisson head: 1 / tower · 5 / km · ~8.8 t / tower *
5. Tension tubular, ~12 m sections (65 m per leg): 6 / tower · 30 / km · ~16.5 t / tower *
6. Pylon joints (~3 m): 18 / tower · 90 / km · ~317.4 t / tower *
7. Pylon cap: 1 / tower · 5 / km · mass not set *
8. Tension lock (on the cap): 1 / tower · 5 / km · mass not set *
9. Captured cross-arm: 1 / tower · 5 / km · mass not set
10. Guy wires and ground anchors: 3 / tower · 15 / km · mass not set

Concrete in parts with a set mass: ~439 t / tower · tubular steel ~16.5 t / tower

SERVICES CARRIED

A. Insulators and conductors

* rests on a stated assumption (see the web page)

MULTI-MODAL CORRIDORS · MMC-DWG-005-05 · MMC-TB GUYED MODULAR COMPONENTS

Schematic — not to scale unless dimensioned · P1 · P2 · P4 · P7
Rev G · 21 Nov 2026 · BB (Boh Brett) Murrell

MMC-DWG-005-06 · MMC-TA MODULAR COMPONENTS

MODULAR COMPONENTS · DUAL-TOWER PORTAL AS BUILT · STANDARD DESIGN · EVERY PART IS A STANDARD MMC COMPONENT · QUANTITIES PER PORTAL AND PER KM

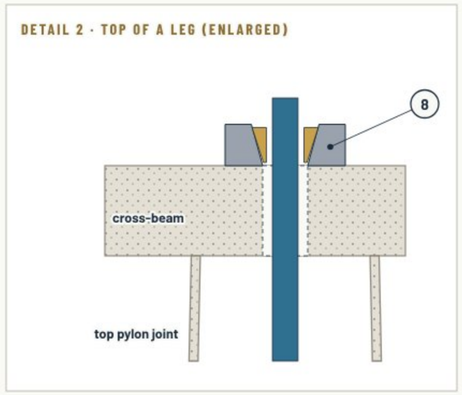

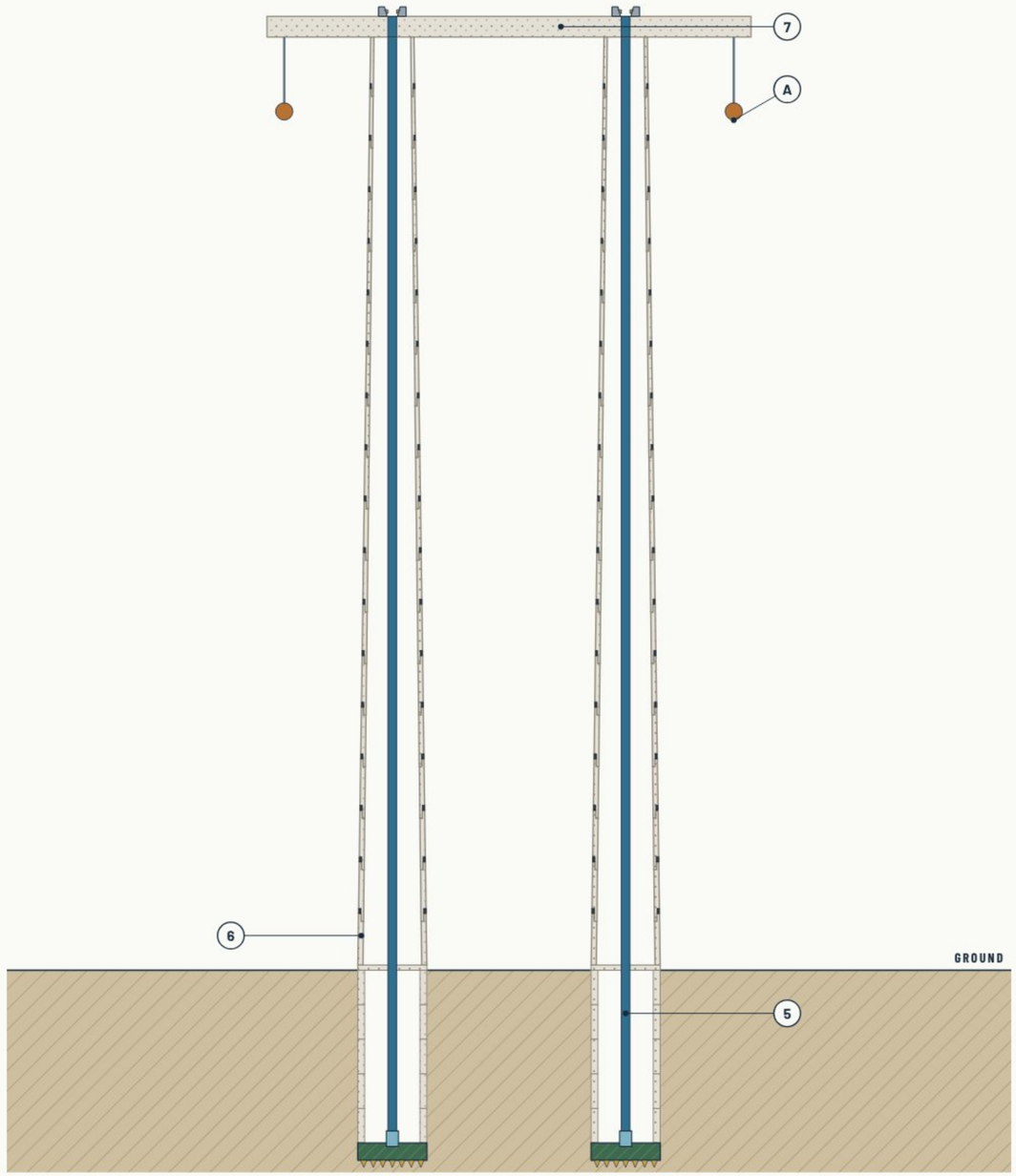

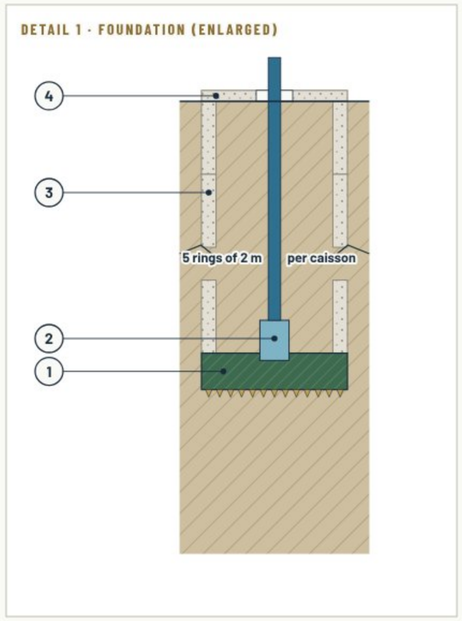

Precast concrete · Tension tubular · Anchor latch · Cutter head · Slip bowl / rail · Conductor

SUMMARY

MMC-TA — MODULAR COMPONENTS

- Every part on this sheet is a standard MMC part, made on the same production line as every other model.
- A different model uses more or fewer of the same parts, not different ones.
- 5 portals per km (200 m apart).
- Pylons 4 m at the base to 2.5 m at the top; pylon joint masses estimated on that taper. Detailed design needed.

PATENTS P1 · P2 · P4 · P7

BILL OF MATERIALS · PER PORTAL · PER KM · MASS

1. Cutter head (cast high-alloy steel, bit inserts): 2 / portal · 10 / km · detailed design *
2. Anchor latch: 2 / portal · 10 / km · mass not set *
3. Caisson rings (2 m): 10 / portal · 50 / km · ~226.2 t / portal *
4. Caisson head: 2 / portal · 10 / km · ~17.7 t / portal *
5. Tension tubular, ~12 m sections (65 m per leg): 12 / portal · 60 / km · ~33.1 t / portal *
6. Pylon joints (~3 m): 36 / portal · 180 / km · ~634.9 t / portal *
7. Cross-beam across the pylon tops: 1 / portal · 5 / km · mass not set
8. Tension lock (on the beam): 2 / portal · 10 / km · mass not set *

Concrete in parts with a set mass: ~879 t / portal · tubular steel ~33.1 t / portal

SERVICES CARRIED

A. Insulators and conductors

* rests on a stated assumption (see the web page)

MULTI-MODAL CORRIDORS · MMC-DWG-005-06 · MMC-TA MODULAR COMPONENTS

Schematic — not to scale unless dimensioned · P1 · P2 · P4 · P7
Rev G · 21 Nov 2026 · BB (Boh Brett) Murrell

MMC-DWG-006-01 · MAGLEV

MM LINES SHEET L-M1 · SUMMARY · TWO GUIDEWAYS ON THE TOP DECK · EMS (T-GUIDEWAY) OR EDS (U-GUIDEWAY) · TRAIN AND ACCESSORIES

A · SECTION THROUGH THE MAGLEV DECK (MMC-VB, 19 M)

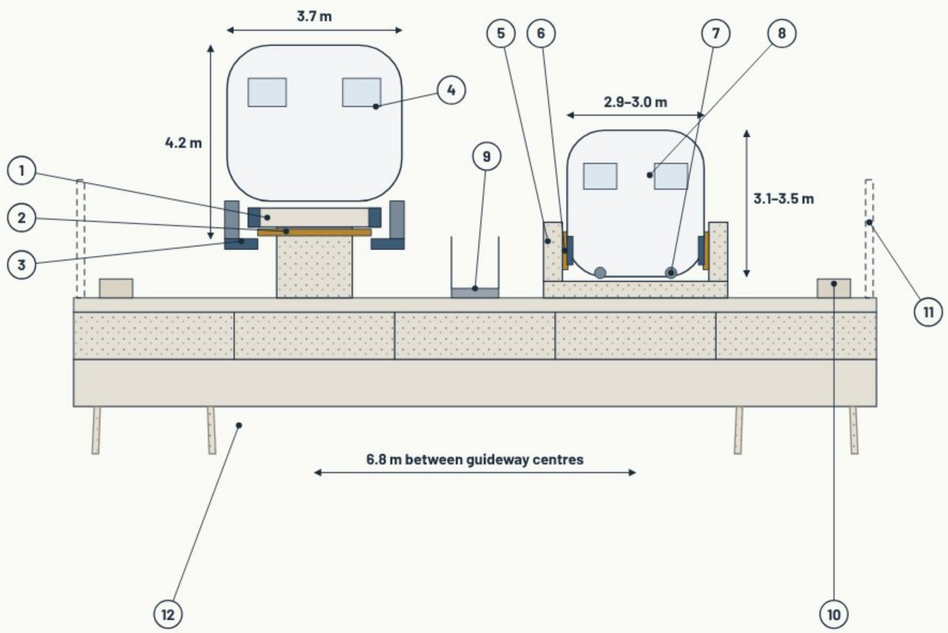

B · SIDE ELEVATION OF THE MAGLEV DECK, TWO 25 M SPANS

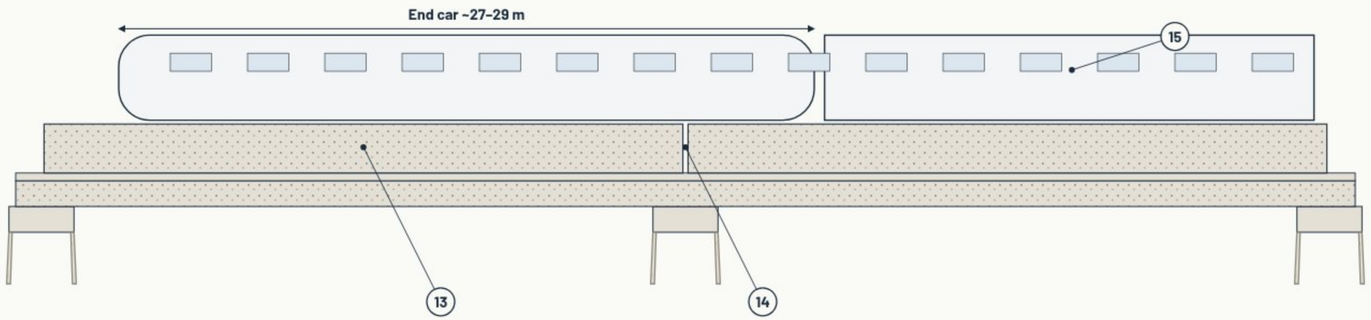

Near guideway shown (EMS type); the second guideway runs 6.8 m behind it.

C · WHERE IT SITS



Maglev is the top deck on every viaduct model.

D · PUBLISHED SYSTEMS

	Transrapid TR09	SC Maglev L0	CRRC EDS
Suspension	EMS, attracts	EDS, repels	EDS, repels
Guideway	T, wrapped	U, trough	U, trough
Gap	~10 mm	~100 mm	~100 mm
Car W x H	3.7 x 4.2 m	2.9 x 3.1 m	3.0 x 3.5 m
Speed	500 km/h	500 op · 603 rec.	600 km/h design

SUMMARY

MAGLEV

- Two maglev guideways on the top deck of every viaduct model: MMC-VC 6 m, MMC-VB 19 m, MMC-VA 42 m. Guideway centres 6.8 m apart on VB and VA, 5.2 m on VC.
- The deck is built to take either published system: EMS on a T-guideway the train wraps around (Transrapid type, ~10 mm gap), or EDS in a U-guideway (SC Maglev and CRRC superconducting type, ~100 mm gap).
- The motor is in the guideway: long stator packs (EMS) or ground coils (EDS). The train carries no engine.
- Envelope set by the largest published car: 3.7 m wide by 4.2 m high (Transrapid TR09).
- Accessories: emergency walkway between the tracks, cable troughs for the power feed and signalling, wind and noise barrier at the deck edges.
- Guideway girders 25 m, one per span. Guideway and fitting sizes indicative; detailed design.

PATENTS P1 · P2 · P4 · P5

CALLOUTS

1. EMS guideway (T), 2.8 m table
2. Long stator packs: the linear motor
3. Support magnets, ~10 mm gap
4. EMS vehicle, 3.7 x 4.2 m
5. EDS guideway (U), coils in the walls
6. Superconducting magnets, ~100 mm gap
7. Landing wheels, below ~150 km/h
8. EDS vehicle, 2.9–3.0 m wide
9. Emergency walkway
10. Cable troughs: power, signalling
11. Wind and noise barrier (indicative)
12. Deck: slab, beams, HB3 cross beam
13. Guideway girder, 25 m, one per span
14. Girder joint at each pylon
15. Train cars up to ~29 m

Precast concrete · Train · Magnets / rail · Stator / coils · Walkway · Maglev level

MULTI-MODAL CORRIDORS · MMC-DWG-006-01 · MAGLEV

Schematic — not to scale unless dimensioned · P1 · P2 · P4 · P5
Rev D · 21 Nov 2026 · BB (Boh Brett) Murrell

MMC-DWG-006-02 · HYPERLOOP ON MMC-VA AND MMC-VB

MM LINES SHEET L-M2 · SUMMARY · MMC-VA: TWO TUBES ON THE 35 M LEVEL · MMC-VB: TUBES REPLACE MAGLEV ON THE 19 M DECK · TUBE SIZE SET BY THE TECHNOLOGY

A · SECTION THROUGH THE HYPERLOOP LEVEL

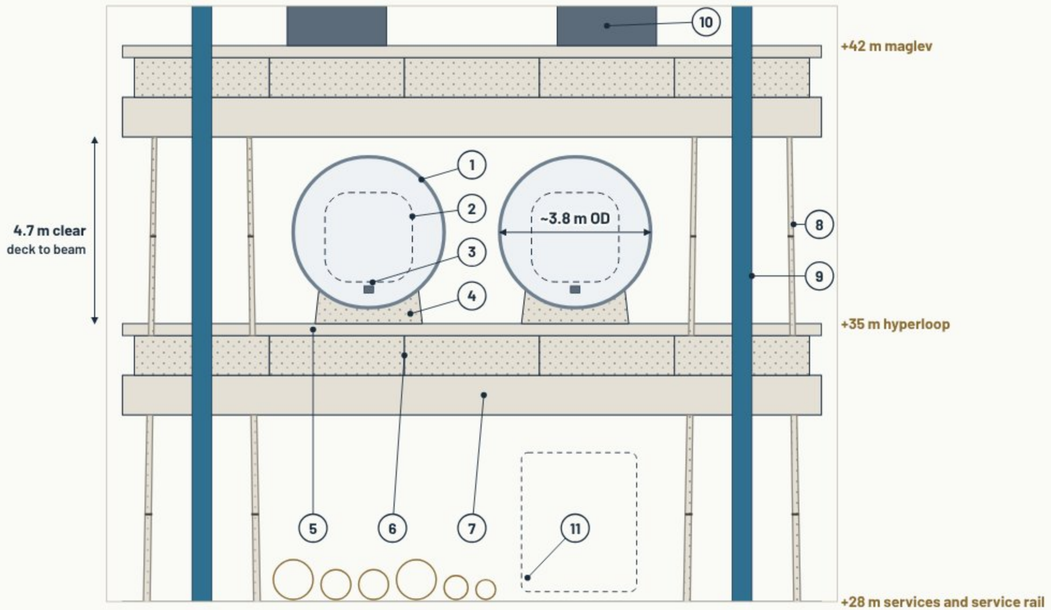

C · WHERE IT SITS: MMC-VA

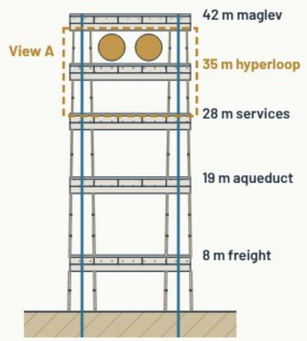

D · MMC-VB OPTION: TUBES REPLACE MAGLEV

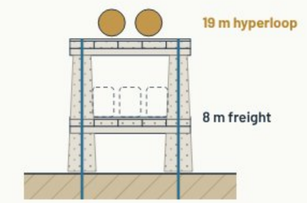

Same saddles and tubes as view A, on the upper deck.

B · SIDE ELEVATION OF THE HYPERLOOP LEVEL, TWO 25 M SPANS

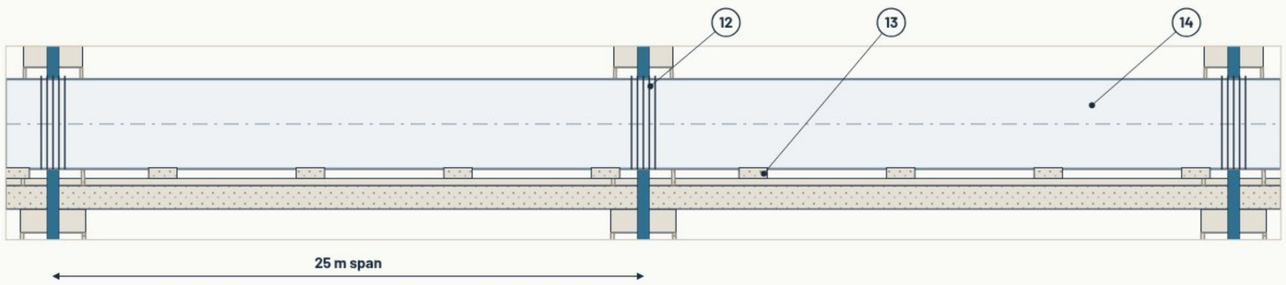

Near tube shown; the second tube runs 5.2 m behind it.

SUMMARY

HYPERLOOP ON MMC-VA AND MMC-VB

- Hyperloop needs a flat, steady line. The two ways to give it one are elevated or underground. MMC is the elevated way: a level deck on drilled foundations every 25 m.
- Hyperloop is pre-commercial. MMC-VA reserves its own level, at 35 m, for two tubes; no deployment is committed.
- MMC-VB option: the tubes replace maglev on the 19 m upper deck, with freight below (view D).
- Two tubes, one each way, ~3.8 m outside diameter, 5.2 m apart, in the 4.7 m clear bay between the 35 m deck and the maglev cross beam above.
- The tubes sit on saddles on the deck. The deck, beams and pylons carry them as they carry every other MM Line.
- Tube sections run pylon to pylon, with a joint at each pylon for expansion.
- Tube size, wall, saddle spacing, vacuum pumping and pod size are set by the technology chosen; detailed design.

PATENTS P1 · P2 · P4 · P5 (reservation only)

CALLOUTS

1. Hyperloop tube, steel, ~3.8 m OD (indicative)
2. Pod (indicative)
3. Running track inside the tube (indicative)
4. Saddle on the deck
5. Deck slab, 35 m level
6. Longitudinal beams (5), laid flush
7. Cross beam (HB4)
8. Pylon (leg), 4 m to 2.5 m taper
9. Tension tubular through the outer beams
10. Maglev level above (42 m)
11. Services and service rail below (28 m)
12. Tube joint at each pylon: expansion (indicative)
13. Saddles along the deck, ~6 m spacing (indicative)
14. Tube sections run pylon to pylon

Precast concrete · Hyperloop tube (steel shell) · Tension tubular · Guideway / track · Pipelines · Hyperloop level

MULTI-MODAL CORRIDORS · MMC-DWG-006-02 · HYPERLOOP ON MMC-VA AND MMC-VB

Schematic — not to scale unless dimensioned · P1 · P2 · P4 · P5
Rev F · 21 Nov 2026 · BB (Boh Brett) Murrell

MMC-DWG-006-03 · ELECTRIC FREIGHT

MM LINES SHEET L-M3 · SUMMARY · THREE STANDARD-GAUGE TRACKS · DOUBLE-STACK · 25 KV OVERHEAD LINE · TRAIN AND ACCESSORIES

A · SECTION THROUGH THE FREIGHT DECK (MMC-VB, 8 M)

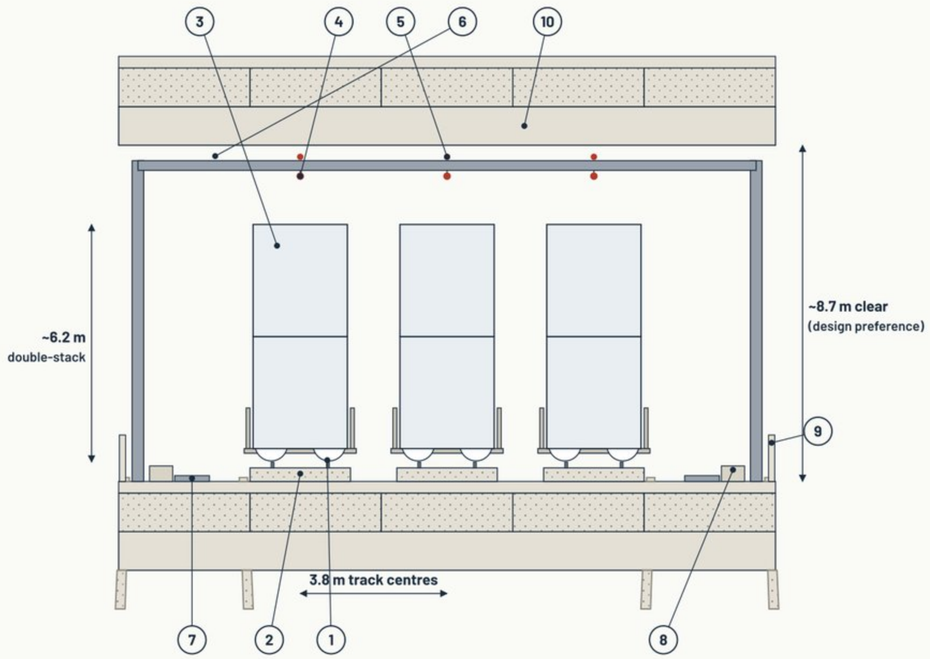

B · SIDE ELEVATION OF THE FREIGHT DECK, TWO 25 M SPANS

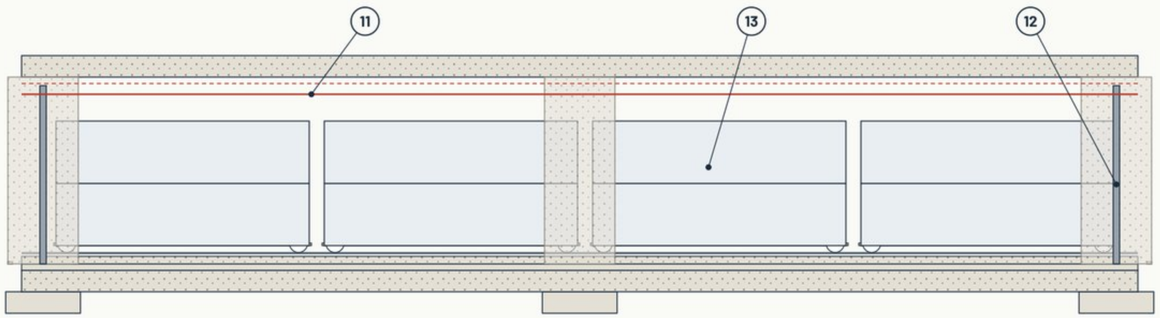

Near track shown; the other two tracks run 3.8 m and 7.6 m behind it.

C · WHERE IT SITS

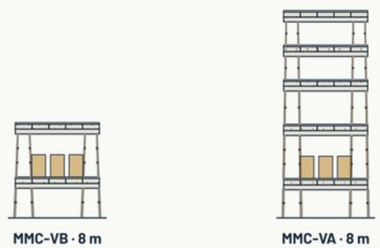

Freight is the lowest deck on MMC-VB and MMC-VA.

D · STANDARD SPECIFICATIONS

Item	Value	Reference
Gauge	1,435 mm	Standard gauge
Electrification	25 kV 50 Hz AC	Most modern mainlines
Contact wire	Above double-stack	Height: detailed design
Axle load	21 t (future 30 t)	Inland Rail
Train length	1,800 m (future 3,600 m)	Inland Rail
Double-stack	7.1 m clearance	Inland Rail

Precast concrete · Container · Wagon · Rail · Overhead line · Portal / walkway · Freight level

SUMMARY

ELECTRIC FREIGHT

- Three standard-gauge (1,435 mm) electric freight tracks on the 8 m freight deck of MMC-VB and MMC-VA, track centres 3.8 m apart.
- Overhead line at 25 kV 50 Hz AC, the system used on most modern mainlines, on portals at every second pylon. The contact wire runs above the double-stacked containers.
- Design reference: 21 t axle loads and 1,800 m trains, rising to 30 t and 3,600 m (the Inland Rail standard).
- Accessories: walkways and cable troughs for signalling and power at each side, parapets at the deck edges.
- Double-stack containers (7.1 m clearance on Inland Rail). The deck above is set to clear them and the wire: about 8.7 m above the freight deck, set by the standard levels (VB maglev 19 m; VA aqueduct 19 m). Design preference; detailed design.
- Structure width held at 17 m. Leg spacing, track centres and side clearance to the legs: detailed design.
- Track slab, wagon and fitting sizes indicative; detailed design.

PATENTS P1 · P2 · P4 · P5

CALLOUTS

1. Standard gauge, 1,435 mm
2. Track slab on the deck (indicative)
3. Well wagon, two high-cube containers
4. Contact wire, 25 kV 50 Hz AC
5. Catenary wire and droppers
6. OLE portal, every second pylon
7. Walkway
8. Cable troughs: signalling and power
9. Parapet
10. Maglev deck above (19 m level)
11. Contact wire above the containers
12. OLE portal at every second pylon (50 m)
13. Double-stack well wagons, 12.2 m (40 ft)

MULTI-MODAL CORRIDORS · MMC-DWG-006-03 · ELECTRIC FREIGHT

Schematic — not to scale unless dimensioned · P1 · P2 · P4 · P5
Rev B · 12 Nov 2026 · BB (Boh Brett) Murrell

MMC-DWG-006-04 · SERVICE RAIL

MM LINES SHEET L-M4 · SUMMARY · MMC-VA LEVEL 3 · ONE STANDARD-GAUGE TRACK BESIDE THE PIPELINES · INSPECTION AND MAINTENANCE VEHICLES

A · SECTION THROUGH LEVEL 3 (MMC-VA, 28 M)

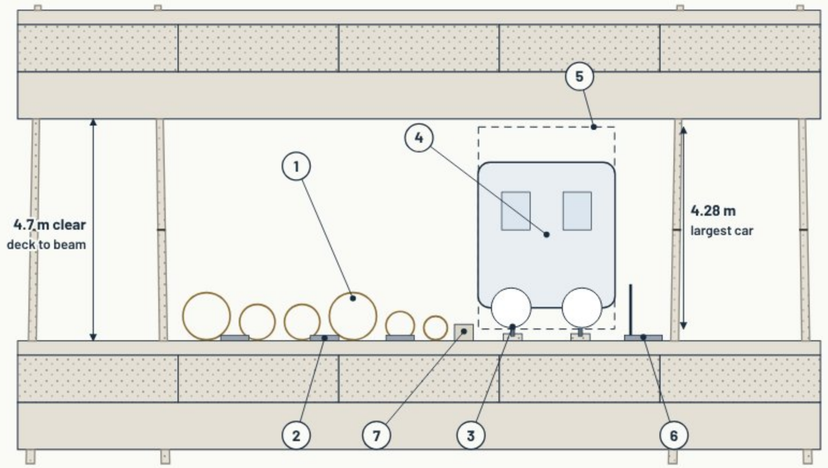

B · SIDE ELEVATION OF LEVEL 3, TWO 25 M SPANS

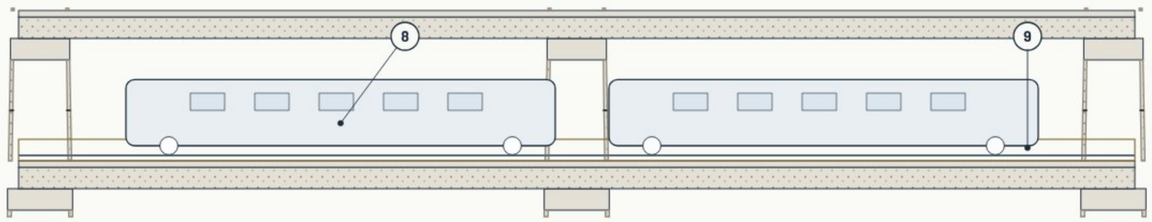

Track side shown; the pipelines run beside it, nearer the far leg.

C · WHERE IT SITS



MMC-VA only: level 3, beside the pipelines.

D · PUBLISHED MAINTENANCE VEHICLES

Vehicle	W x H	Fit in 4.7 m
Robel ROSPECT	1.75 x 2.10 m	Yes
RT-I inspection train	2.30 x 2.85 m	Yes
INKA measurement car	2.99 x 3.53 m	Yes
Končar measurement train	2.885 x 4.28 m	Tight: ~0.17 m
Track gauge	1,435 mm	Standard gauge

SUMMARY

SERVICE RAIL

- One standard-gauge (1,435 mm) service track on level 3 of MMC-VA (28 m), beside the pipelines. Service rail is on MMC-VA only.
- It carries inspection, maintenance and emergency vehicles on their own track, so maintenance does not wait for gaps in freight or maglev traffic.
- Level 3 has 4.7 m clear from deck to the beam above: VA levels 8 / 19 / 28 / 35 / 42 m. The pipelines sit to one side, the track to the other.
- Published inspection and measurement cars from 2.1 m to 3.53 m high fit. The largest found (4.28 m) leaves about 0.17 m: detailed design.
- Accessories: walkway and handrail beside the track, cable trough for signalling and power. Access points along the corridor: spacing to detailed design.
- Vehicle power, track form and fitting sizes indicative; detailed design.

PATENTS P1 · P2 · P4 · P5

CALLOUTS

1. Pipelines and fibre (sizes on 006-07 to 006-10)
2. Pipe saddles (indicative)
3. Standard gauge, 1,435 mm, on plinths
4. Measurement car, 2.99 x 3.53 m
5. Largest published car, 4.28 m high
6. Walkway and handrail
7. Cable trough: signalling, power
8. Inspection or maintenance car
9. Pipelines beside the track

Precast concrete · Vehicle · Rail · Pipelines · Walkway · Service rail level

MULTI-MODAL CORRIDORS · MMC-DWG-006-04 · SERVICE RAIL

Schematic — not to scale unless dimensioned · P1 · P2 · P4 · P5
Rev B · 21 Nov 2026 · BB (Boh Brett) Murrell

MMC-DWG-006-05 · ROAD

MM LINES SHEET L-M5 · SUMMARY · AN OPTION, NOT A FIXED LEVEL · ROAD IN PLACE OF FREIGHT · ONE LANE EACH WAY · FULL SHOULDERS

A · SECTION THROUGH THE ROAD DECK (IN PLACE OF FREIGHT, 8 M)

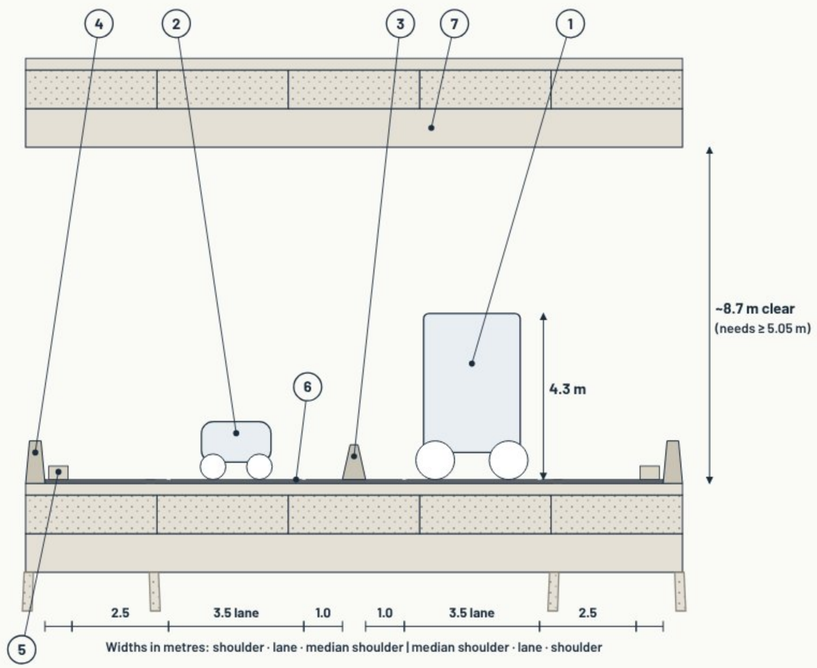

C · WHERE IT SITS: INTERCHANGEABLE



MMC-VB · road for freight

MMC-VA · road for freight

Road can take a deck with at least 5.05 m clear: in place of freight, or as an added deck (freight, road, maglev) by scenario.

D · CROSS-SECTIONS ON THE 17 M DECK

Layout	Width needed	On 17 m
1 lane each way, full shoulders	15.6 m	Fits (drawn)
2 lanes each way, median shoulders only	17.6 m	Does not fit
2 lanes each way, full shoulders	~22.6 m	Wider deck

B · SIDE ELEVATION OF THE ROAD DECK, TWO 25 M SPANS

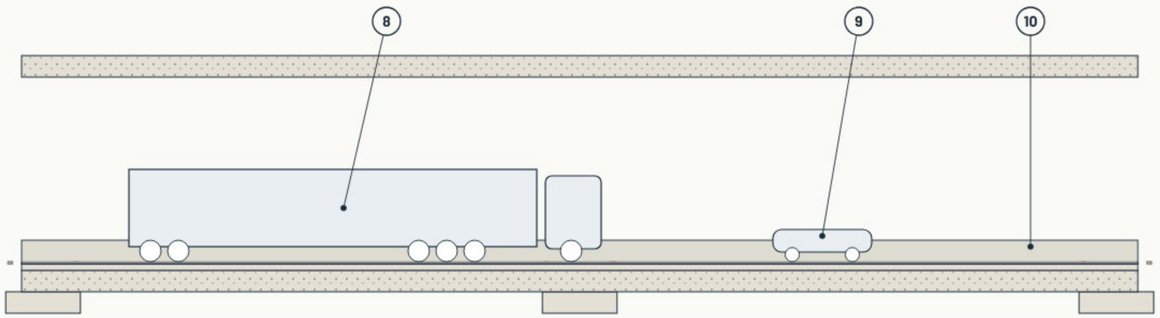

Near lane shown; the opposing lane runs behind the median barrier.

Precast concrete · Road surfacing · Barrier · Vehicle · Cable trough · Road deck

SUMMARY

ROAD

- Road is an option, not a fixed level of any model. It can take the place of freight for a given scenario, or a corridor can carry freight, road and maglev. The aim is interchangeability.
- Drawn in place of freight on the 8 m deck of MMC-VB (the same deck on MMC-VA): one lane each way, 3.5 m lanes, 2.5 m shoulders, 1.0 m median shoulders, median and edge barriers.
- This fits the 17 m deck (15.6 m needed). Two lanes each way need 17.6 m with median shoulders only, or ~22.6 m with full shoulders: a wider deck.
- Any deck carrying road needs at least 5.05 m clear above it; the freight deck has ~8.7 m.
- Accessories: barriers, service strip with cable trough, surfacing on the deck slab. Exits and on-ramps at stations and crossings.
- Surfacing, barrier, drainage and lighting sizes indicative; detailed design.

PATENTS P1 · P2 · P4 · P5

CALLOUTS

1. Truck, 2.5 m wide x 4.3 m high
2. Car
3. Median barrier
4. Edge barrier
5. Service strip, cable trough
6. Road surfacing on the deck slab
7. Deck above (19 m level)
8. Semi-trailer, ~19 m
9. Car
10. Edge barrier along the deck

MULTI-MODAL CORRIDORS · MMC-DWG-006-05 · ROAD

Schematic — not to scale unless dimensioned · P1 · P2 · P4 · P5
Rev B · 21 Nov 2026 · BB (Boh Brett) Murrell

MMC-DWG-006-06 · HVDC

MM LINES SHEET L-M6 · SUMMARY · CONDUCTORS OUTSIDE THE STRUCTURE · ARMS OFF THE CROSS BEAM · 3 PER SIDE · MMC-VA: TWO ARM LEVELS

A · MMC-VB SECTION: ARMS AT THE HB3 CROSS BEAM

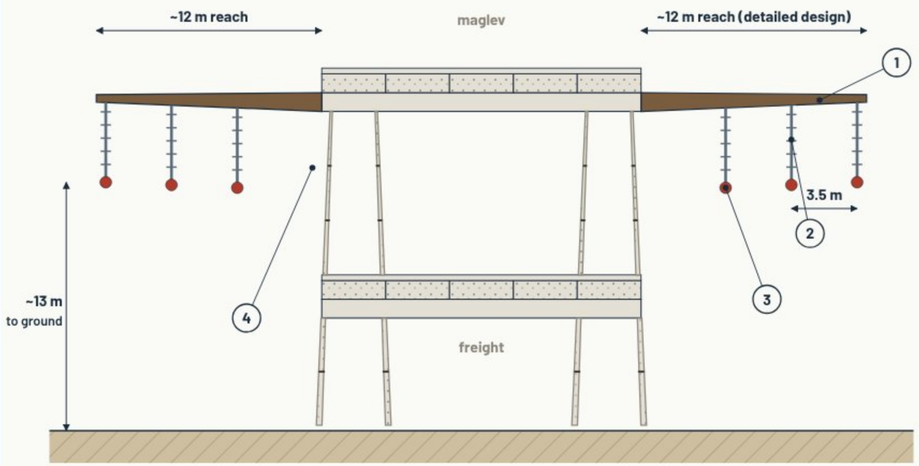

B · SIDE ELEVATION (MMC-VB), TWO 25 M SPANS

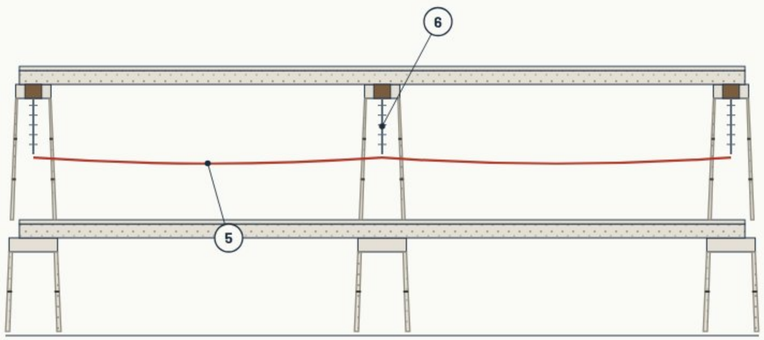

Near side shown. Arm spacing along the line: detailed design.

C · MMC-VA: TWO ARM LEVELS

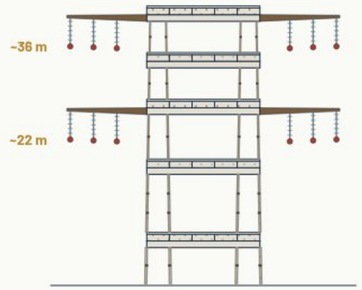

Arms at the level-3 and level-5 cross beams (indicative).
3 conductors per side per level: 12 in all.

D · PUBLISHED FIGURES

Item	Value	Source
±800 kV bipole	3,000-9,000 MW	ABB Review
±800 kV double bipole	6,000-18,000 MW	ABB Review
Jinping-Sunan, ±800 kV	7,200 MW bipole	Hitachi Energy
Ground clearance, 800 kV AC	12.40 m	Indian Electricity Rules
Crossing clearance, 800 kV	7.94 m	Indian Electricity Rules
MMC drawn	3 per side; ~13 m on VB	Indicative

SUMMARY

HVDC

- HVDC conductors run outside the structure: arms off a cross beam, cantilevered beyond the deck edges, three conductors per side.
- MMC-VB: one arm level at the HB3 cross beam; conductors ~13 m above ground. MMC-VA: two arm levels (level-3 and level-5 cross beams), 12 conductors in all.
- Arm reach (~12 m), conductor spacing (~3.5 m) and insulator strings (~4 m) are indicative. Clearances at ±800 kV are several metres (800 kV AC: 12.4 m to ground); detailed design.
- Published ±800 kV capacity: 3-9 GW per bipole (Jinping-Sunan 7.2 GW). Corridor capacity: detailed design.
- The deck, freight and maglev stay inside the conductors.
- Option for more lines: 6 per side on an outer support pylon, sheet 006-12.

PATENTS P1 · P2 · P4 · P5

CALLOUTS

1. Arm off the HB3 cross beam, cantilevered past the deck edge
2. Insulator string, ~4 m (detailed design)
3. Conductor bundle, 3 per side
4. Structure: deck and legs inside the conductors
5. Conductor, outside the deck edge
6. Arm and insulator string at the pylon

Precast concrete · HVDC arm · Insulator string · Conductor

MULTI-MODAL CORRIDORS · MMC-DWG-006-06 · HVDC

Schematic — not to scale unless dimensioned · P1 · P2 · P4 · P5
Rev B · 21 Nov 2026 · BB (Boh Brett) Murrell

MMC-DWG-006-07 · WATER PIPELINE

MM LINES SHEET L-M7 · SUMMARY · MMC-VB · 1 M PIPE HUNG UNDER THE FREIGHT DECK

A · MMC-VB SECTION: UNDER THE FREIGHT DECK

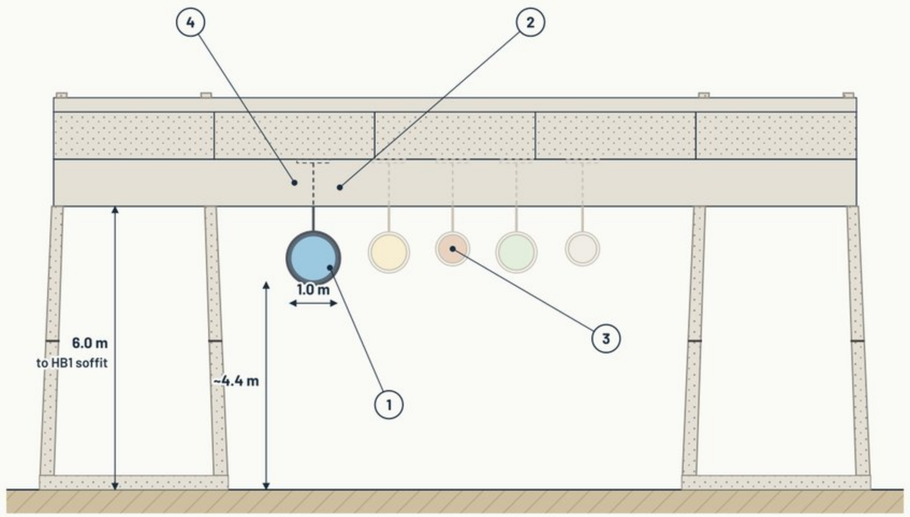

C · WHERE IT SITS

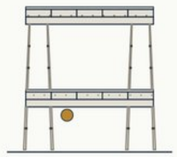

MMC-VB · under the 8 m freight deck

On MMC-VA, water runs in the aqueduct on level 2: sheet 006-11.

D · PIPE DIAMETER OPTIONS

Diameter	Water / span	Flow	Per year	To ground
0.6 m	~7 t	~0.42 m^3/s	~13 GL	~4.8 m
0.8 m	~13 t	~0.75 m^3/s	~24 GL	~4.6 m
1.0 m (drawn)	~20 t	~1.18 m^3/s	~37 GL	~4.4 m
1.2 m	~28 t	~1.70 m^3/s	~54 GL	~4.2 m
1.4 m	~39 t	~2.31 m^3/s	~73 GL	~4.0 m
1.6 m	~50 t	~3.02 m^3/s	~95 GL	~3.8 m

Flow at 1.5 m/s (assumed). Pipe top 0.6 m under the HB1 soffit (6.0 m), in its own harness.

B · SIDE ELEVATION UNDER THE FREIGHT DECK (MMC-VB), TWO 25 M SPANS

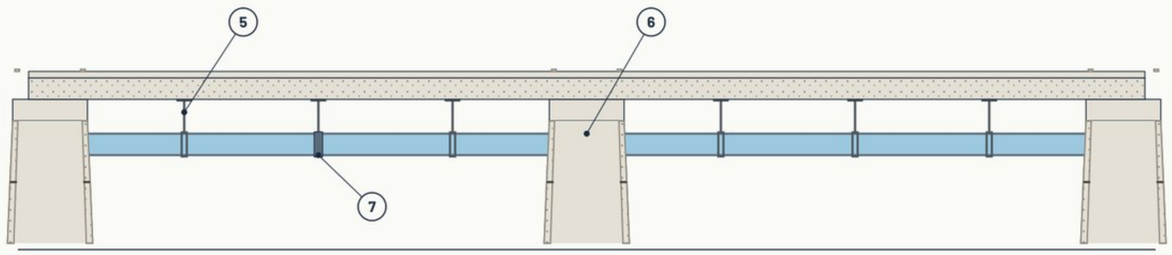

Near pipe shown. Pipe, hanger and joint sizes indicative.

Precast concrete · Water · Steel pipe · Hanger · Pipe position

SUMMARY

WATER PIPELINE

- MMC-VB: a 1.0 m water pipe (site figure), ~19.6 t of water and ~8 t of pipe per 25 m span. Options from 0.6 m to 1.6 m in table D: ~13 to ~95 GL per year.
- MMC-VB: hung under the freight deck in its own circular harness, hung from a single plate fixed under the longitudinal beams, beside the other pipes, passing under the HB1 cross beam; ~4.4 m clear to ground.
- On MMC-VA, water runs in the aqueduct on level 2 (sheet 006-11); there is no separate water pipe.
- At an assumed 1.5 m/s the pipe carries ~1.18 m^3/s, about 37 GL per year. Pumping, pressure and joint spacing: detailed design.

PATENTS P1 · P2 · P4 · P5

CALLOUTS

1. Water pipe, 1.0 m (site figure)
2. Plate on the beam, single drop, circular harness (~6 m apart, assumed)
3. Gas, liquid fuels, hydrogen, fibre: 006-08 to 006-10
4. HB1 cross beam: pipes pass under it
5. Plate and harness at each support
6. Pipes pass under HB1 at each pylon
7. Expansion joint (spacing: detailed design)

MMC-DWG-006-08 · GAS AND LIQUID FUELS

MM LINES SHEET L-M8 · SUMMARY · GAS 750 MM X80 AND A LIQUID FUELS PIPE · SIDE BY SIDE · MMC-VB UNDER THE FREIGHT DECK · MMC-VA LEVEL 3

A · MMC-VB SECTION: PIPES IN HARNESSES UNDER THE FREIGHT DECK

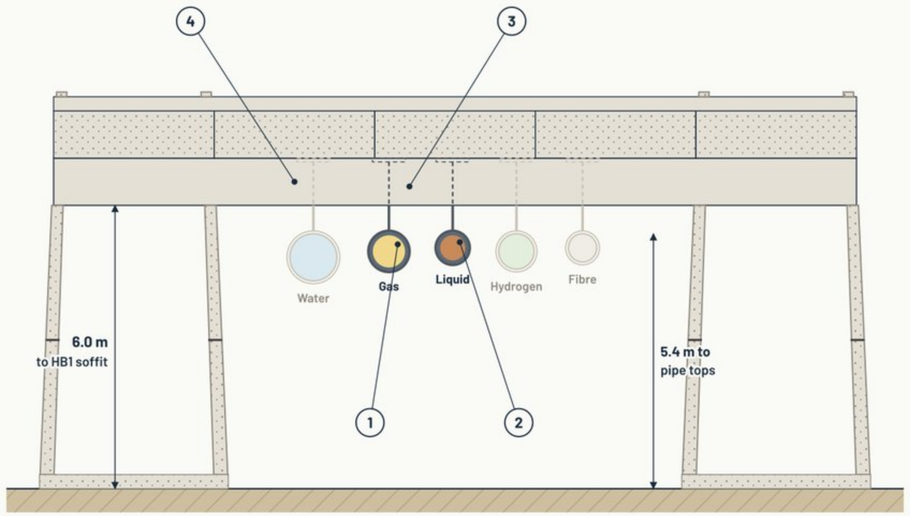

C · WHERE IT SITS

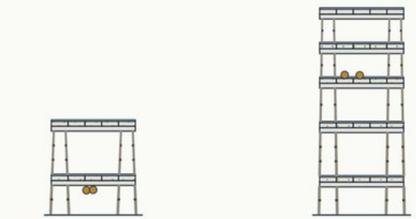

MMC-VB · under the 8 m deck

MMC-VA · level 3, 28 m

Pipes drawn enlarged. Same decks and order on both models.

D · PUBLISHED GAS PIPELINES BY DIAMETER

Diameter	Pipeline	Capacity	Per year	Length
350 mm	Parmelia (WA)	68 TJ/d	~25 PJ	416 km
450 mm	Eastern Gas (NSW/Vic)	350 TJ/d	~128 PJ	797 km
508 mm	Mortlake (Vic)	150 TJ/d	~55 PJ	83 km
762 mm	Woleebee Lateral (Old)	854 TJ/d	~312 PJ	88 km
750 mm	MMC gas (drawn)	Detailed design		

AEMC gas pipeline register. Capacity depends on pressure, compression and length.

B · SIDE ELEVATION UNDER THE FREIGHT DECK (MMC-VB), TWO 25 M SPANS

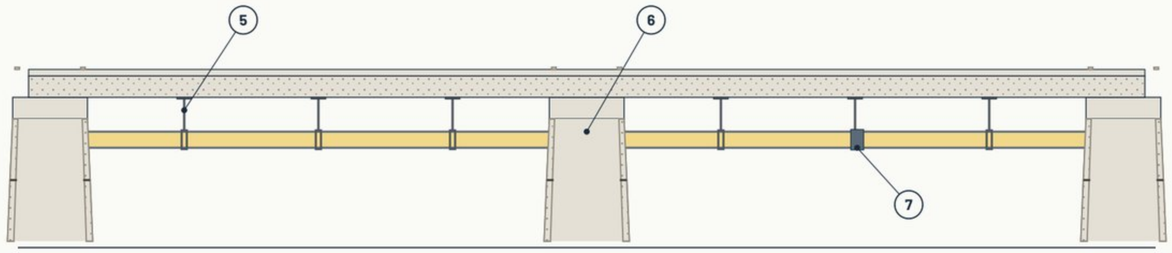

Near pipe shown (gas); the others run side by side behind it.

Precast concrete · Gas · Liquid fuels · Steel pipe · Hanger · Pipe position

SUMMARY

GAS AND LIQUID FUELS

- Gas: a 750 mm X80 pipe (site figure), ~7 t of pipe per 25 m span. Liquid fuels: their own pipe beside it, ~600 mm (indicative).
- Gases, liquid fuels and hydrogen are the same kind of line in different pipe sizes, on the same decks, side by side.
- MMC-VB: each pipe hangs in its own circular harness from a single plate fixed under the longitudinal beams, side by side, passing under the HB1 cross beam. MMC-VA: on level 3 (28 m).
- Capacity depends on pressure, compression and length. Published Australian gas pipelines of 350 to 762 mm carry 68 to 854 TJ/day (about 25 to 312 PJ a year), table D.
- Pipe sizes, valves, compression and pressure: detailed design.

PATENTS P1 · P2 · P4 · P5

CALLOUTS

1. Gas, 750 mm X80 (site)
2. Liquid fuels, ~600 mm (indicative)
3. Plate on the beam, single drop, circular harness
4. HB1 cross beam: pipes pass under it
5. Plate and harness at each support
6. Pipes pass under HB1 at each pylon
7. Isolation valve (spacing: detailed design)

MULTI-MODAL CORRIDORS · MMC-DWG-006-08 · GAS AND LIQUID FUELS

Schematic — not to scale unless dimensioned · P1 · P2 · P4 · P5
Rev B · 12 Nov 2026 · BB (Boh Brett) Murrell

MMC-DWG-006-09 · HYDROGEN

MM LINES SHEET L-M9 · SUMMARY · HYDROGEN PIPE ~750 MM (INDICATIVE) · SAME DECKS, SIDE BY SIDE WITH THE OTHER PIPES

A · MMC-VB SECTION: PIPES IN HARNESSES UNDER THE FREIGHT DECK

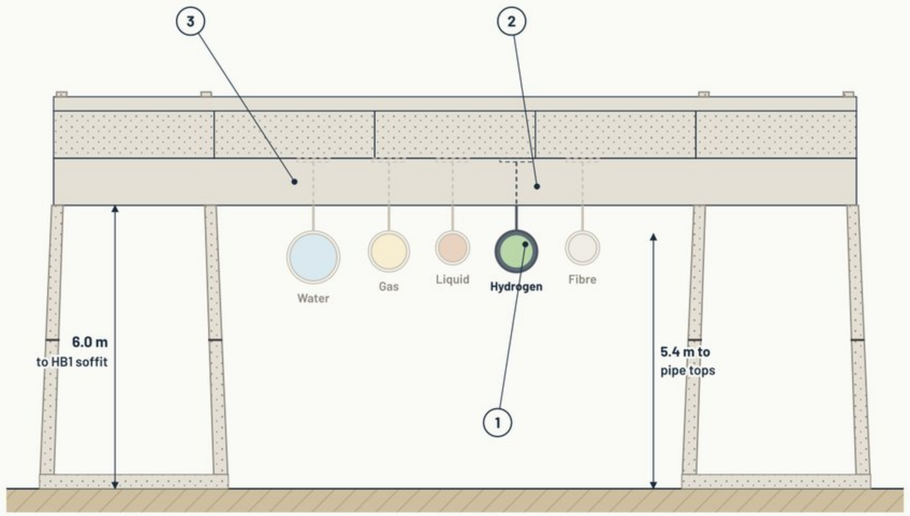

C · WHERE IT SITS

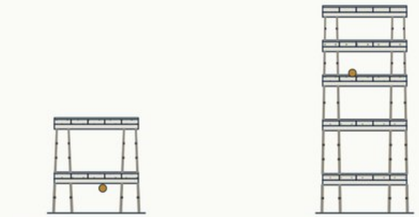

MMC-VB · under the 8 m deck

MMC-VA · level 3, 28 m

Pipes drawn enlarged. Same decks and order on both models.

D · THE PIPELINES, SIDE BY SIDE

Pipe	Size	MMC-VB	MMC-VA
Water	1.0 m (site)	Under deck	Aqueduct, level 2
Gas	750 mm (site)	Under deck	Level 3
Liquid fuels	~600 mm	Under deck	Level 3
Hydrogen	~750 mm	Under deck	Level 3
Fibre ducts	~600 mm bank	Under deck	Level 3

Water and gas sizes from the site; others indicative (detailed design).

B · SIDE ELEVATION UNDER THE FREIGHT DECK (MMC-VB), TWO 25 M SPANS

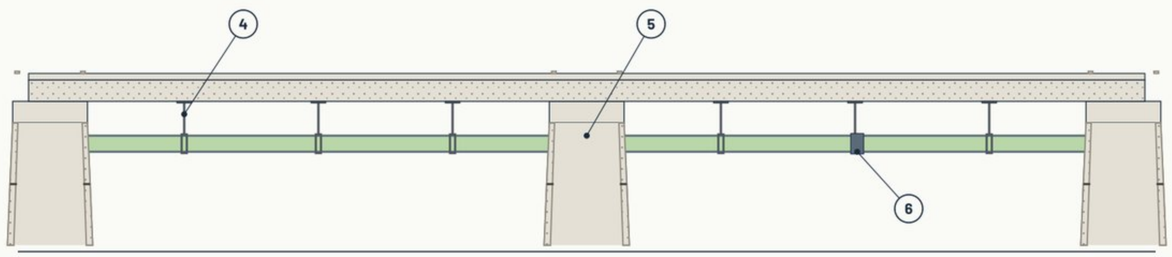

Near pipe shown (hydrogen); the others run side by side behind it.

Precast concrete · Hydrogen · Steel pipe · Hanger · Pipe position

SUMMARY

HYDROGEN

- Hydrogen runs in its own pipe, ~750 mm (indicative; the site sets no size), beside the gas and liquid fuels pipes.
- Gases, liquid fuels and hydrogen are the same kind of line in different pipe sizes, on the same decks, side by side.
- MMC-VB: each pipe hangs in its own circular harness from a single plate fixed under the longitudinal beams, side by side, passing under the HB1 cross beam. MMC-VA: on level 3 (28 m).
- Pipe size, material grade, pressure and compression: detailed design.

PATENTS P1 · P2 · P4 · P5

CALLOUTS

1. Hydrogen, ~750 mm (indicative)
2. Plate on the beam, single drop, circular harness
3. HB1 cross beam: pipes pass under it
4. Plate and harness at each support
5. Pipes pass under HB1 at each pylon
6. Isolation valve (spacing: detailed design)

MULTI-MODAL CORRIDORS · MMC-DWG-006-09 · HYDROGEN

Schematic — not to scale unless dimensioned · P1 · P2 · P4 · P5
Rev B · 12 Nov 2026 · BB (Boh Brett) Murrell

MMC-DWG-006-10 · FIBRE

MM LINES SHEET L-M10 · SUMMARY · SOVEREIGN FIBRE · ONE DUCT BANK, ~600 MM (INDICATIVE) · SIDE BY SIDE WITH THE PIPES

A · MMC-VB SECTION: PIPES IN HARNESSES UNDER THE FREIGHT DECK

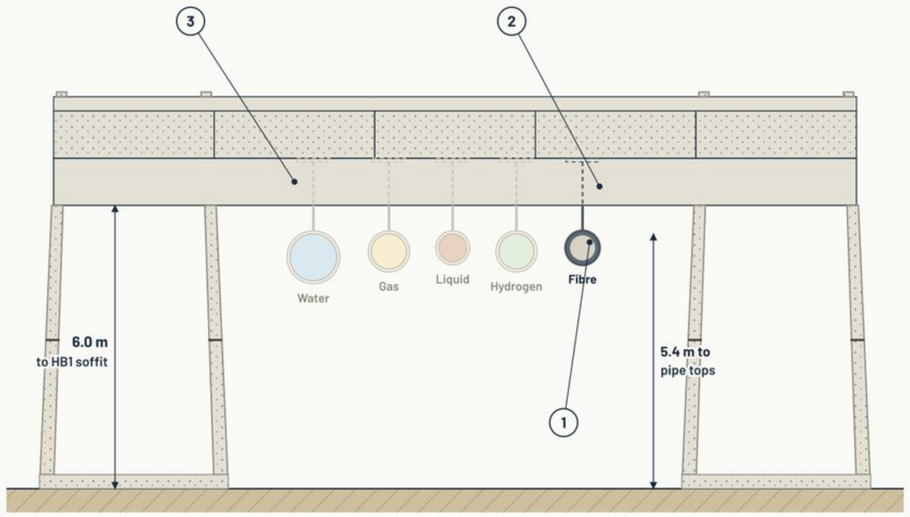

C · WHERE IT SITS

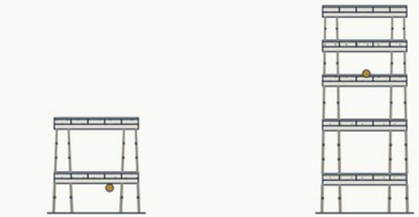

MMC-VB · under the 8 m deck

MMC-VA · level 3, 28 m

Pipes drawn enlarged. Same decks and order on both models.

D · THE LINES, SIDE BY SIDE

Pipe	Size	MMC-VB	MMC-VA
Water	1.0 m (site)	Under deck	Aqueduct, level 2
Gas	750 mm (site)	Under deck	Level 3
Liquid fuels	~600 mm	Under deck	Level 3
Hydrogen	~750 mm	Under deck	Level 3
Fibre ducts	~600 mm bank	Under deck	Level 3

Water and gas sizes from the site; fibre 96 ducts (site); other sizes indicative.

B · SIDE ELEVATION UNDER THE FREIGHT DECK (MMC-VB), TWO 25 M SPANS

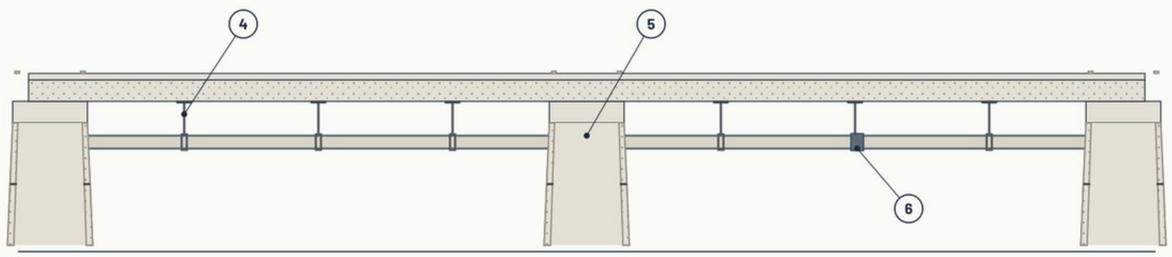

Near pipe shown (fibre duct bank); the others run side by side behind it.

Precast concrete · Fibre duct bank · Steel pipe · Hanger · Pipe position

SUMMARY

FIBRE

- Sovereign fibre runs in one duct bank, ~600 mm (indicative), beside the pipes. The site gives 96 ducts.
- It is the same kind of line as the pipes: on the same decks, side by side, in its own harness.
- MMC-VB: hung under the freight deck in a circular harness from a single plate under the longitudinal beams, passing under the HB1 cross beam. MMC-VA: on level 3 (28 m).
- One bank for now; a second bank on the other side is a later option. Duct count, cable size and access chambers: detailed design.

PATENTS P1 · P2 · P4 · P5

CALLOUTS

1. Fibre duct bank, ~600 mm bank (indicative)
2. Plate on the beam, single drop, circular harness
3. HB1 cross beam: pipes pass under it
4. Plate and harness at each support
5. Pipes pass under HB1 at each pylon
6. Cable joint (spacing: detailed design)

MULTI-MODAL CORRIDORS · MMC-DWG-006-10 · FIBRE

Schematic — not to scale unless dimensioned · P1 · P2 · P4 · P5

Rev A · 12 Nov 2026 · BB (Boh Brett) Murrell

MMC-DWG-006-11 · AQUEDUCT

MM LINES SHEET L-M11 · SUMMARY · MMC-VA LEVEL 2 · FULL BAY, 16.4 M WIDE x 6.4 M DEEP · OPEN AQUEDUCT OR ROOFED PIPE, BY TERRAIN · FLOW IN GL PER YEAR

A · SECTION THROUGH THE AQUEDUCT (MMC-VA, LEVEL 2)

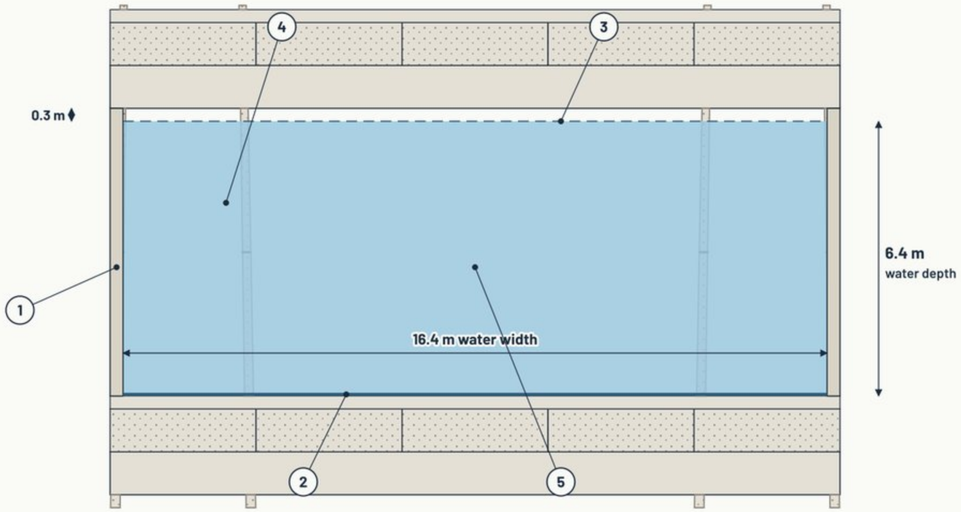

The design allows for both options: open aqueduct (gravity fall) or closed with a roof and run as a pipe (pumped), by terrain.

C · WHERE IT SITS



MMC-VA only: level 2, the full bay.

D · WIDTH, HEIGHT AND FLOW

Item	Value	Velocity
Water section	16.4 m wide x 6.4 m deep	
Flow area	~105 m^2	
Water, 25 m span	~2,624 t	
Water per metre	~105 t/m	~105,000 t/km
Gradient 1:5,000	~268 m^3/s, ~8,450 GL/yr	~2.55 m/s
Gradient 1:10,000	~190 m^3/s, ~5,980 GL/yr	~1.81 m/s
Gradient 1:20,000	~134 m^3/s, ~4,230 GL/yr	~1.28 m/s
Gradient 1:50,000	~85 m^3/s, ~2,670 GL/yr	~0.81 m/s

Manning, running full, n = 0.013 (concrete, assumed); legs in the channel ignored.

B · SIDE ELEVATION OF THE AQUEDUCT (MMC-VA), TWO 25 M SPANS

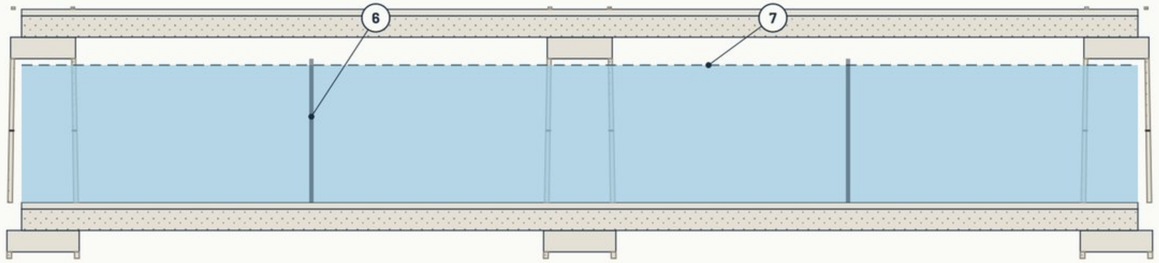

Near wall shown. Flow runs along the corridor at the set gradient.

SUMMARY

AQUEDUCT

- MMC-VA carries water in a channel on level 2 (19 m) that fills the full bay: 16.4 m wide x 6.4 m deep, ~105 m^2 of flow area, ~2,624 t of water per 25 m span.
- Running full by gravity it carries ~85 to ~268 m^3/s, about 2,670 to 8,450 GL per year, for gradients of 1:50,000 to 1:5,000.
- The design allows for both options, chosen by terrain: an open aqueduct where the route can hold a continuous fall (gravity), or a closed channel with a roof, run as a pipe under pressure where it cannot (pumped).
- Water weight: ~105 t per metre, ~2,624 t per 25 m span, ~105,000 t per km. It is the governing design load for MMC-VA.
- Dampening (proposed): the water adds mass, lowering the structure's natural frequency, and a free surface can slosh and absorb motion, the principle of a tuned liquid damper. When roofed and running full there is no free surface: added mass only. The added mass also raises inertia loads in an earthquake. Detailed design.
- Channel wall panels each side; lining on the deck slab.
- Flows assume Manning running full (n = 0.013) and ignore the legs in the channel. Gradient, lining, joints and pumping: detailed design.

PATENTS P1 · P2 · P4 · P5

CALLOUTS

1. Channel wall panel, both sides
2. Lining on the level-2 deck slab (indicative)
3. Water surface, 0.3 m under the beam
4. Pylon legs pass through the channel
5. Flow area ~105 m^2, ~105 t/m
6. Wall panel joint (spacing: detailed design)
7. Water surface, set by the gradient

Precast concrete · Water · Wall panel · Lining / surface · Aqueduct

MULTI-MODAL CORRIDORS · MMC-DWG-006-11 · AQUEDUCT

Schematic — not to scale unless dimensioned · P1 · P2 · P4 · P5
Rev A · 12 Nov 2026 · BB (Boh Brett) Murrell

MMC-DWG-006-12 · HVDC OPTION

MM LINES SHEET L-M6 OPTION · SUMMARY · HIGHER VOLTAGE · 3 CONDUCTORS PER SIDE, WIDE SPACING · ARM ANGLED UP TO AN OUTER PYLON FOR HEIGHT

A · MMC-VB SECTION: ARMS ANGLED UP TO OUTER PYLONS

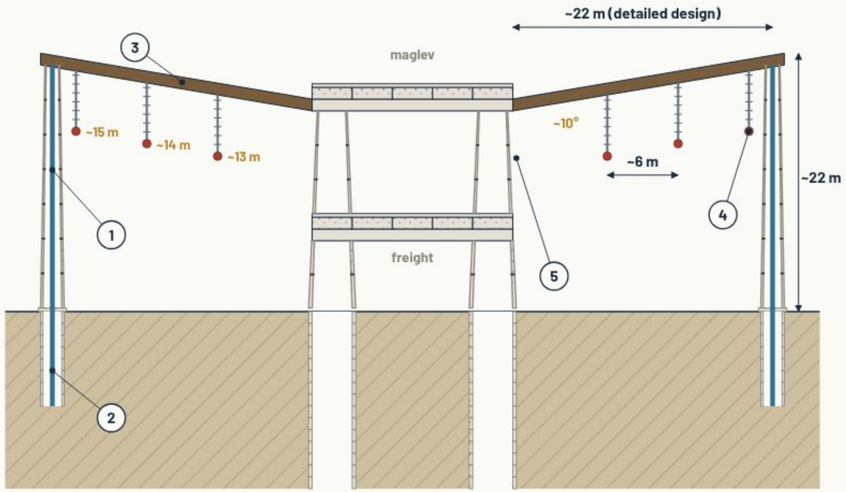

B · SIDE ELEVATION OF THE OUTER PYLONS (MMC-VB), TWO 25 M SPANS

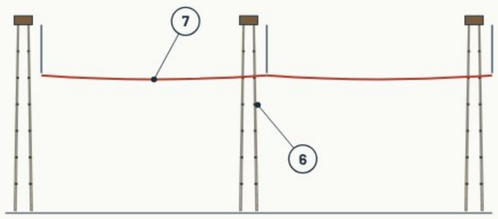

Spacing of the outer pylons along the line: detailed design.

C · MMC-VA: TWO LEVEL BEAMS

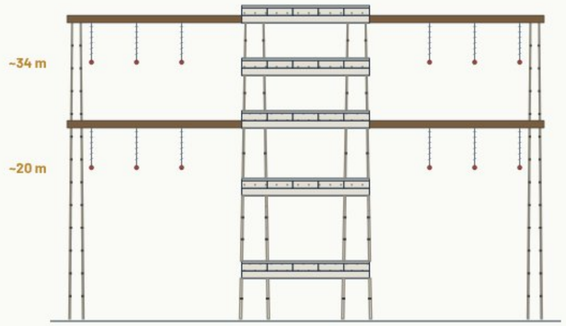

Level beams: VA already has the height. 3 per side per level, 12 in all.

D · COMPARED WITH 006-06

	006-06	006-12 (higher voltage)
Conductors per side	3, ~3.5 m apart	3, ~6 m apart
Arm, MMC-VB	Cantilever ~12 m	Beam ~22 m at ~10° to ~22 m
Conductor height, VB	~13 m	~13 / ~14 / ~15 m
Overall width	~41 m	~63 m
Outer pylon	-	2-1.25 m; caisson 2 m x 8 m
Extra pylons per km	0	80 (at every 25 m)
Voltage, capacity	Detailed design	Detailed design

SUMMARY

HVDC OPTION

- Option for a higher-voltage system: 3 conductors per side, spaced wider (~6 m), on a beam from the cross beam to an outer support pylon on its own caisson.
- MMC-VB: the beam is angled ~10° up to the outer pylon (~22 m): conductors at ~13, ~14 and ~15 m. MMC-VA: level beams at levels 3 and 5, 12 conductors.
- Conductor spacing and height depend on the voltage and current. A published ±800 kV study uses 23 m minimum to ground; a steeper angle gives more height. Design option; detailed design.
- The outer pylon is half size (2 m to 1.25 m) on one 2 m OD ATS caisson ~8 m deep with its own tension tubular. Overall width ~63 m; wider corridor accepted.
- Drawn with an outer pylon at every structure pylon (80 per km); spacing along the line, strings (~5 m) and clearances indicative; detailed design.

PATENTS P1 · P2 · P4 · P5

CALLOUTS

1. Outer pylon, 2 m to 1.25 m (half size)
2. ATS caisson 2 m OD, ~8 m
3. Arm angled ~10° up from the HB3 cross beam
4. 3 conductors per side, ~6 m apart
5. Main structure unchanged (MMC-VB)
6. Outer support pylon at every structure pylon (assumed)
7. Outer conductor

Precast concrete · HVDC beam · Insulator string · Conductor

MULTI-MODAL CORRIDORS · MMC-DWG-006-12 · HVDC OPTION

Schematic — not to scale unless dimensioned · P1 · P2 · P4 · P5
Rev B · 21 Nov 2026 · BB (Boh Brett) Murrell

MMC-DWG-007-01 · SUBSEA LINE LANE — DEMONSTRATIVE

DEMONSTRATIVE, NOT DETAILED DESIGN · MM LINES SHEET L-M13 · MM LINES ON THE SEABED IN BUNDLES · PROTECTION · SHORE TIE-IN · INSTALLATION

A · BUNDLE CROSS-SECTION (INDICATIVE)

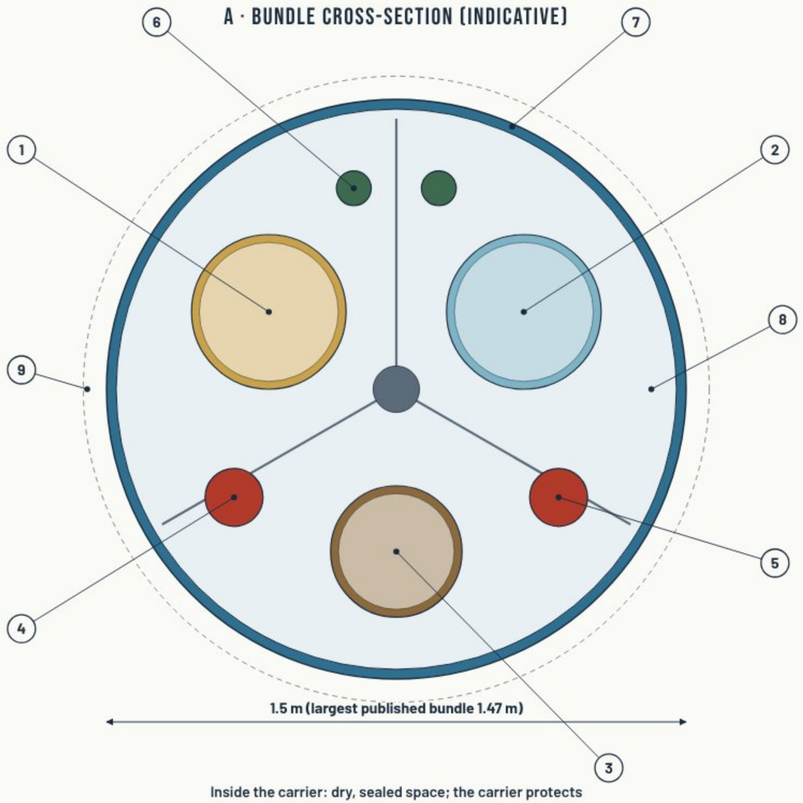

Inside the carrier: dry, sealed space; the carrier protects every line inside it. Line sizes indicative, detailed design.

C · LANE ON THE SEABED (INDICATIVE)

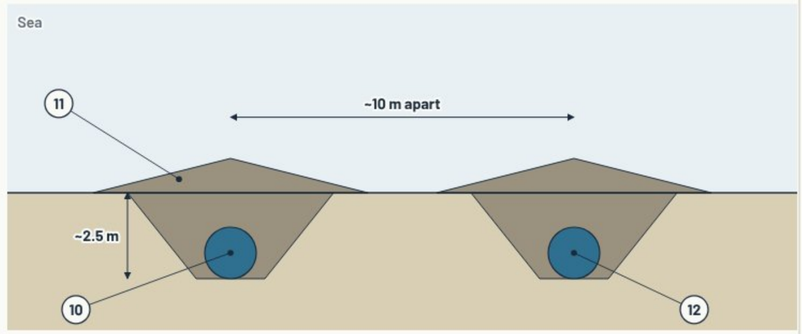

Protection zone either side of the lane, marked on charts: no anchoring or bottom trawling. Widths and cover: detailed design.

D · SHORE TIE-IN (SCHEMATIC, NOT TO SCALE)

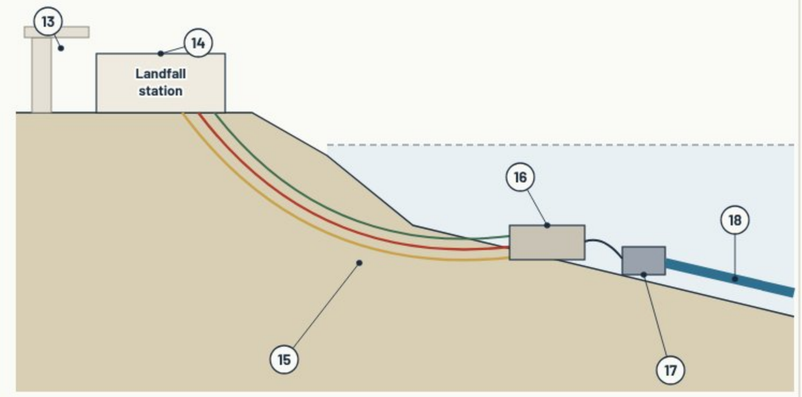

Manifold, towhead and jumper: subsea oilfield practice (PLEM / PLET).

B · INSTALLATION: BUNDLE TOWED OUT AT CONTROLLED DEPTH (SCHEMATIC)

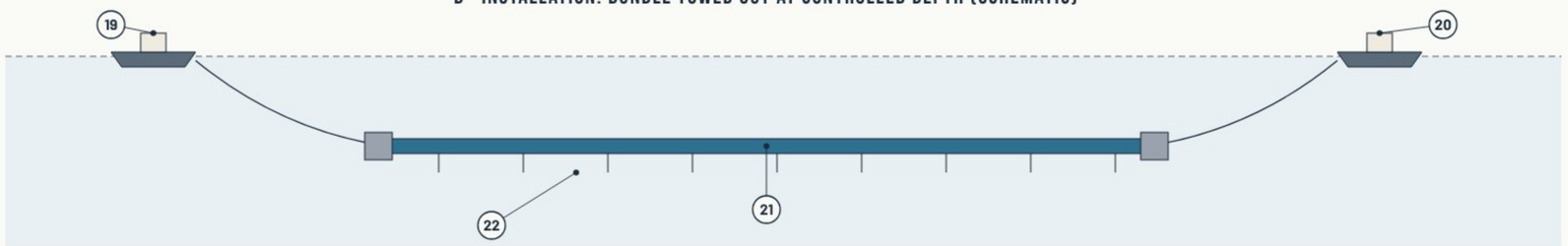

Bundles are made on land, tested, launched and towed. Lay vessels and repair vessels carrying spares are bespoke (MMC proposal).

Carrier pipe · HVDC cable · Gas · Hydrogen · Liquid fuels · Fibre · Rock cover

SUMMARY

SUBSEA LANE — DEMONSTRATIVE

- Demonstrative, not detailed design. Subsea line lane: the MM Lines laid on the seabed in bundles, without a tunnel. MMC proposal.
- Published bundle practice: pipelines plus power, signal and fibre in one steel carrier pipe, tested on land and towed out. Largest carrier 1.47 m; longest single bundle 7.7 km (Subsea 7). Drawn here at 1.5 m.
- A long lane is a chain of bundle sections joined at towheads and tie-in manifolds; section length is set by the fabrication site.
- Protection: carrier, coating and armour; trench, rock cover and a charted protection zone. 70–80% of cable faults are from fishing and anchors (ICPC).
- Shore tie-in: landfall station on the land corridor, bores under the shore, seabed tie-in manifold. Line sizes, widths and depths indicative; detailed design.

PATENTS P1 · P2 · P4 · P5

CALLOUTS

1. Gas line
2. Hydrogen line
3. Liquid fuels line
4. HVDC cable (+), armoured
5. HVDC cable (–), armoured
6. Fibre cables (2)
7. Steel carrier pipe, 1.5 m OD
8. Spacer frame
9. Coating and armour layer
10. Bundle in trench
11. Rock cover and berm
12. Second bundle (next stage)
13. MMC land corridor
14. HVDC converter, pipeline manifold, fibre landing
15. Bores under the shore (one per line)
16. Seabed tie-in manifold
17. Towhead
18. Bundle
19. Lead tug
20. Trail tug
21. Bundle section, towhead each end (to 7.7 km)
22. Chains hold it at depth, clear of waves

MULTI-MODAL CORRIDORS · MMC-DWG-007-01 · SUBSEA LANE — DEMONSTRATIVE

Schematic — not to scale unless dimensioned · P1 · P2 · P4 · P5
Rev C · 21 Nov 2026 · BB (Boh Brett) Murrell

MMC-DWG-007-02 · SUBSEA LANE LAY — DP FORMATION

DEMONSTRATIVE, NOT DETAILED DESIGN · THREE VESSELS ON DP WITH A GAP · ONE LINE PER VESSEL · JOINED AND ARMOURED ON THE CENTRE VESSEL

A · PLAN: THREE VESSELS, ONE LINE EACH (INDICATIVE)

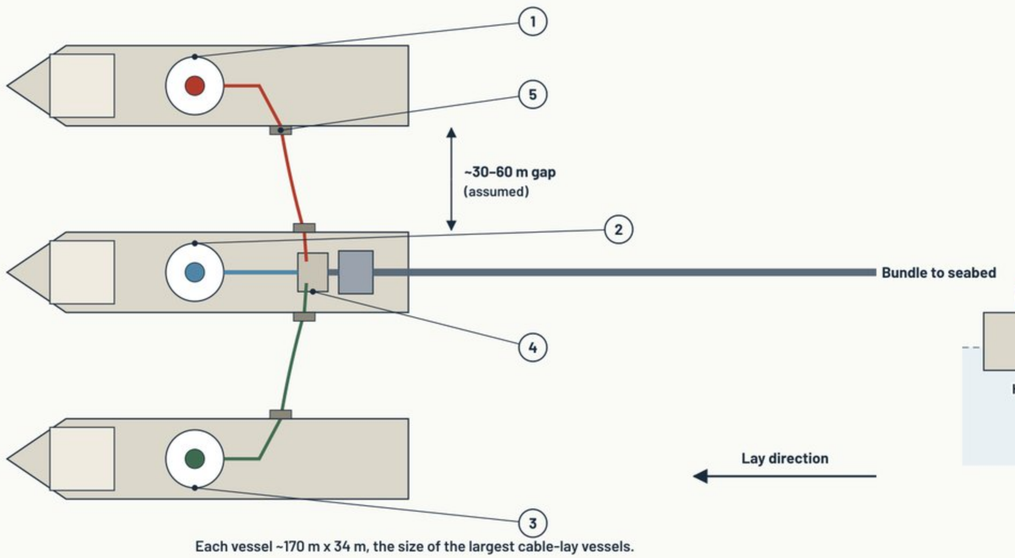

Each vessel ~170 m x 34 m, the size of the largest cable-lay vessels.

D · ACROSS THE FORMATION, LOOKING AFT

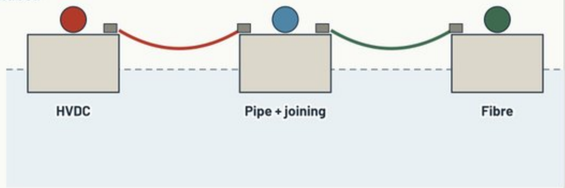

Lines span the gap from chute to chute, held under tension so they do not kink. Each vessel holds station on DP (DP2 / DP3).

B · CENTRE VESSEL: JOIN, ARMOUR, DEPLOY (SCHEMATIC, NOT TO SCALE)

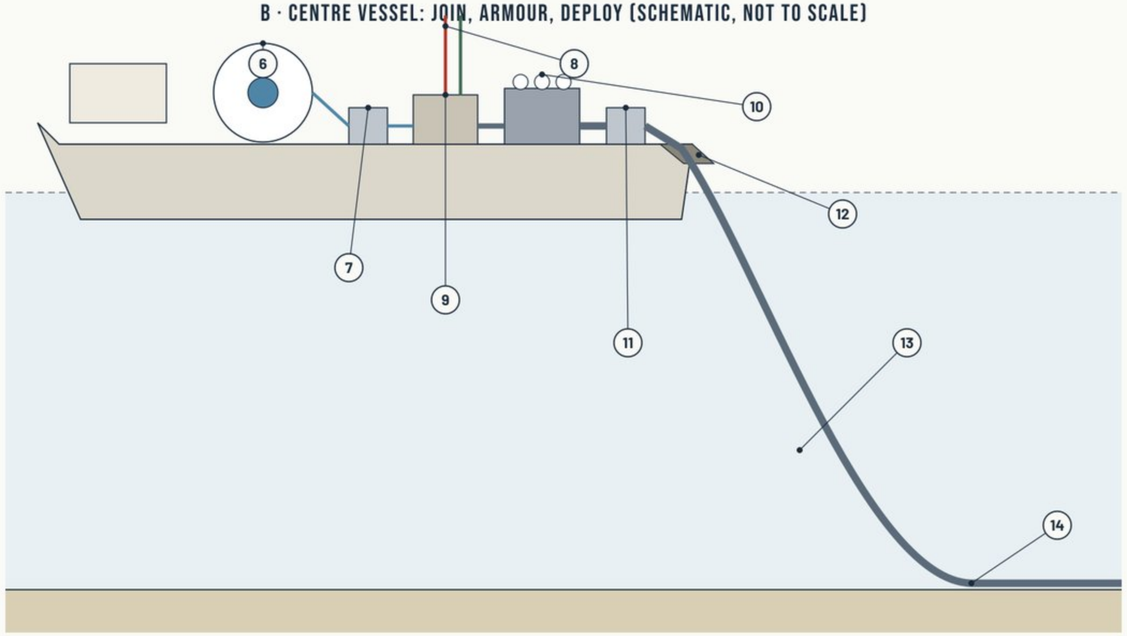

Order on deck: reel → tensioner → joining → armouring → tensioner → stern chute. Lay speed is set by the slowest line.

C · ARMOURED BUNDLE (INDICATIVE)

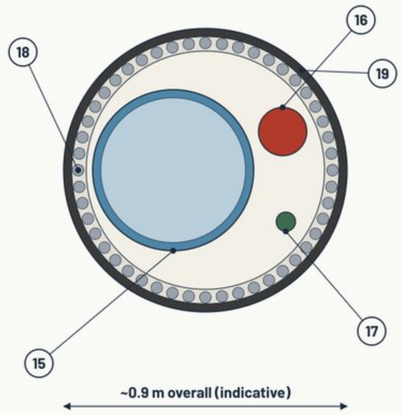

Sizes indicative; detailed design.

DP formation: open sea. For sheltered water the vessels can be tied alongside (007-03).

HVDC cable · Water pipe · Fibre · Armoured bundle · Hull

SUMMARY

SUBSEA LANE LAY — DP FORMATION

- Demonstrative, not detailed design. Lay method for a subsea line lane: one line per vessel, joined and armoured on the centre vessel, then laid as one bundle. MMC proposal; the lay method varies by lane.
- Three vessels hold station on dynamic positioning (DP) with a gap between hulls (~30–60 m assumed, from naval replenishment at sea). Lines cross the gap on chutes under tension.
- Published vessels: cable carousels 10,000 t + 7,000 t (Prysmian Leonardo da Vinci, Monna Lisa; 171 m x 34 m, DP3). Reel-lay pipe to 20 in OD, 5,600 t main reel (Subsea7 Seven Vega).
- Piggyback lay (cable strapped to pipe in one pass) is current practice. Armouring at sea is not: armour is applied in the factory today. The armouring station is proposed.
- Water pipe on the centre vessel, HVDC and fibre on the side vessels (ruling 13 Nov 2026). Gap, bundle sizes and deck layout assumed; detailed design.

PATENTS P1 · P2 · P4 · P5

CALLOUTS

1. HVDC cable vessel: cable carousel
2. Centre vessel: water pipe reel
3. Fibre cable vessel: cable carousel
4. Joining, then armouring station
5. Chutes; line in tension across the gap
6. Water pipe reel (reel-lay to 20 in)
7. Tensioner
8. HVDC and fibre in, from side vessels
9. Joining station: lines brought together
10. Armouring station (proposed)
11. Tensioner
12. Stern chute
13. Armoured bundle, catenary to seabed
14. Touchdown
15. Water pipe, 0.5 m OD
16. HVDC cable
17. Fibre cable
18. Wire armour
19. Outer sheath

MULTI-MODAL CORRIDORS · MMC-DWG-007-02 · SUBSEA LANE LAY — DP FORMATION

Schematic — not to scale unless dimensioned · P1 · P2 · P4 · P5
Rev A · 13 Nov 2026 · BB (Boh Brett) Murrell

MMC-DWG-007-03 · SUBSEA LANE LAY — RAFTED

DEMONSTRATIVE, NOT DETAILED DESIGN · THREE VESSELS TIED ALONGSIDE · SHELTERED WATER ONLY · JOINED AND ARMOURED ON THE CENTRE VESSEL

A · PLAN: THREE VESSELS, ONE LINE EACH (INDICATIVE)

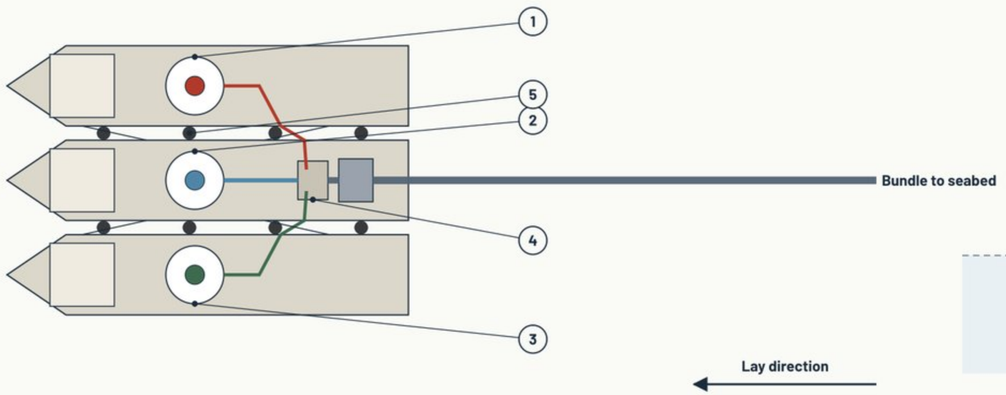

Each vessel ~170 m x 34 m, the size of the largest cable-lay vessels.

D · ACROSS THE FORMATION, LOOKING AFT

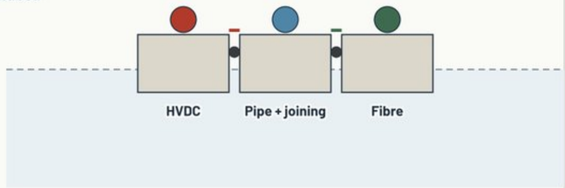

Hulls tied together with fenders between them; lines pass directly across. Hulls move against each other in swell: sheltered water only.

B · CENTRE VESSEL: JOIN, ARMOUR, DEPLOY (SCHEMATIC, NOT TO SCALE)

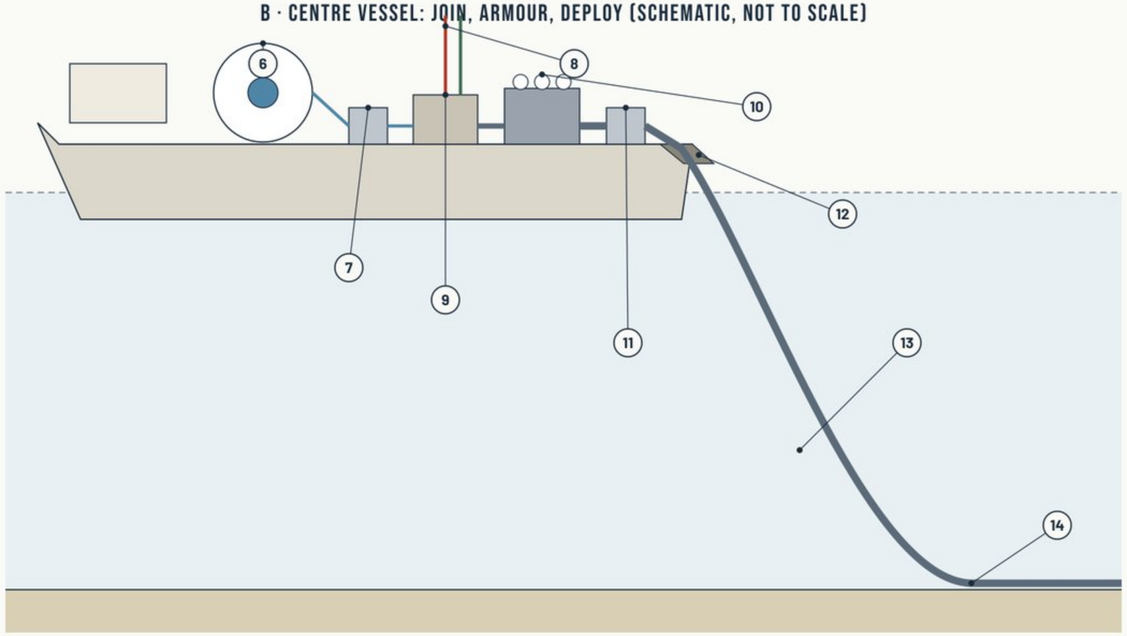

Order on deck: reel → tensioner → joining → armouring → tensioner → stern chute. Lay speed is set by the slowest line.

C · ARMOURED BUNDLE (INDICATIVE)

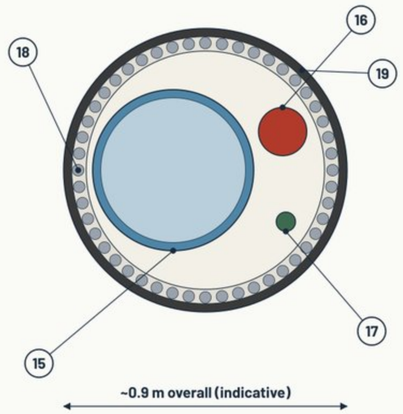

Sizes indicative; detailed design.

Rafted alongside: for sheltered water (bays, straits, near shore). Open sea: DP formation (007-02).

HVDC cable · Water pipe · Fibre · Armoured bundle · Hull

SUMMARY

SUBSEA LANE LAY — RAFTED

- Demonstrative, not detailed design. Lay method for a subsea line lane: one line per vessel, joined and armoured on the centre vessel, then laid as one bundle. MMC proposal; the lay method varies by lane.
- Three vessels tied alongside with fenders and mooring lines. Lines pass directly across. Hulls move against each other in swell: sheltered water only.
- Published vessels: cable carousels 10,000 t + 7,000 t (Prysmian Leonardo da Vinci, Monna Lisa; 171 m x 34 m, DP3). Reel-lay pipe to 20 in OD, 5,600 t main reel (Subsea7 Seven Vega).
- Piggyback lay (cable strapped to pipe in one pass) is current practice. Armouring at sea is not: armour is applied in the factory today. The armouring station is proposed.
- Water pipe on the centre vessel, HVDC and fibre on the side vessels (ruling 13 Nov 2026). Gap, bundle sizes and deck layout assumed; detailed design.

PATENTS P1 · P2 · P4 · P5

CALLOUTS

1. HVDC cable vessel: cable carousel
2. Centre vessel: water pipe reel
3. Fibre cable vessel: cable carousel
4. Joining, then armouring station
5. Fenders and mooring lines
6. Water pipe reel (reel-lay to 20 in)
7. Tensioner
8. HVDC and fibre in, from side vessels
9. Joining station: lines brought together
10. Armouring station (proposed)
11. Tensioner
12. Stern chute
13. Armoured bundle, catenary to seabed
14. Touchdown
15. Water pipe, 0.5 m OD
16. HVDC cable
17. Fibre cable
18. Wire armour
19. Outer sheath

MULTI-MODAL CORRIDORS · MMC-DWG-007-03 · SUBSEA LANE LAY — RAFTED

Schematic — not to scale unless dimensioned · P1 · P2 · P4 · P5
Rev A · 13 Nov 2026 · BB (Boh Brett) Murrell

MMC-DWG-007-04 · SUBSEA NEAR-SHORE MANIFOLD

DEMONSTRATIVE, NOT DETAILED DESIGN · ONE MANIFOLD NEAR SHORE · NEW LANES CONNECTED SUBSEA · LINES TO LAND SIZED FOR BOTH TIE-INS

A · PLAN: MANIFOLD NEAR SHORE (INDICATIVE)

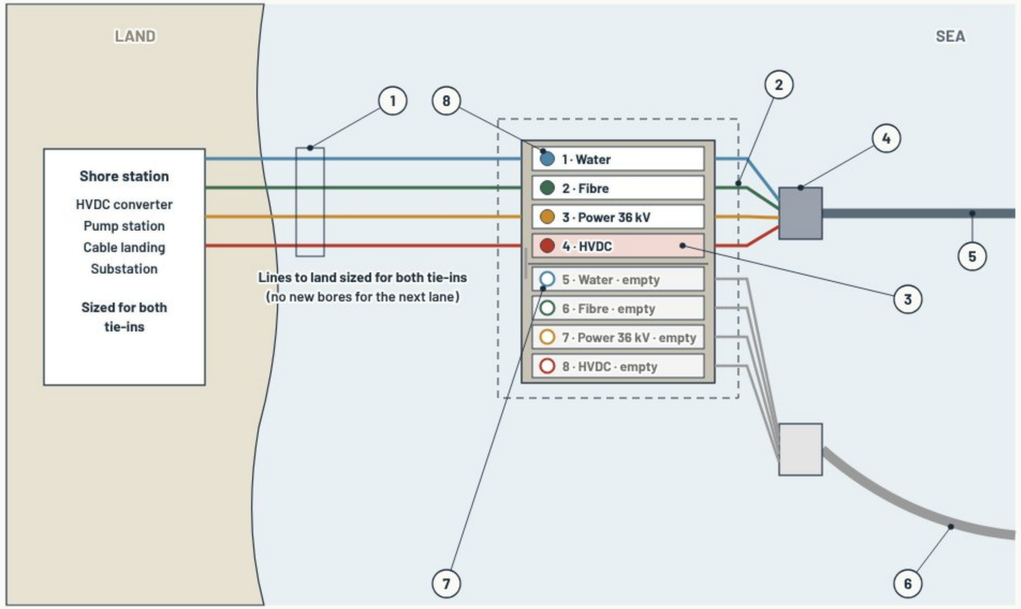

D · CONNECTION AT EACH SLOT

Slot · line	Connection	Status
1, 5 · Water, fuel	Valve and jumper, ROV-operated	In use (offshore oil and gas)
2, 6 · Fibre	Branching unit or splice	In use (subsea telecom)
3, 7 · Power	Wet-mate connector	Qualified (IEC/IEEE 61886-1)
4, 8 · HVDC	Subsea HVDC connector	Technology to develop

Slots 1–4: tie-in A, in service. Slots 5–8: tie-in B, empty and capped until the next lane.

Highest qualified subsea power connection found: 145 kV, dry-mate (joined on deck, not on the seabed).

HVDC lines run at hundreds of kV: the connector is to develop.

B · SECTION: SHORE STATION TO MANIFOLD (SCHEMATIC, NOT TO SCALE)

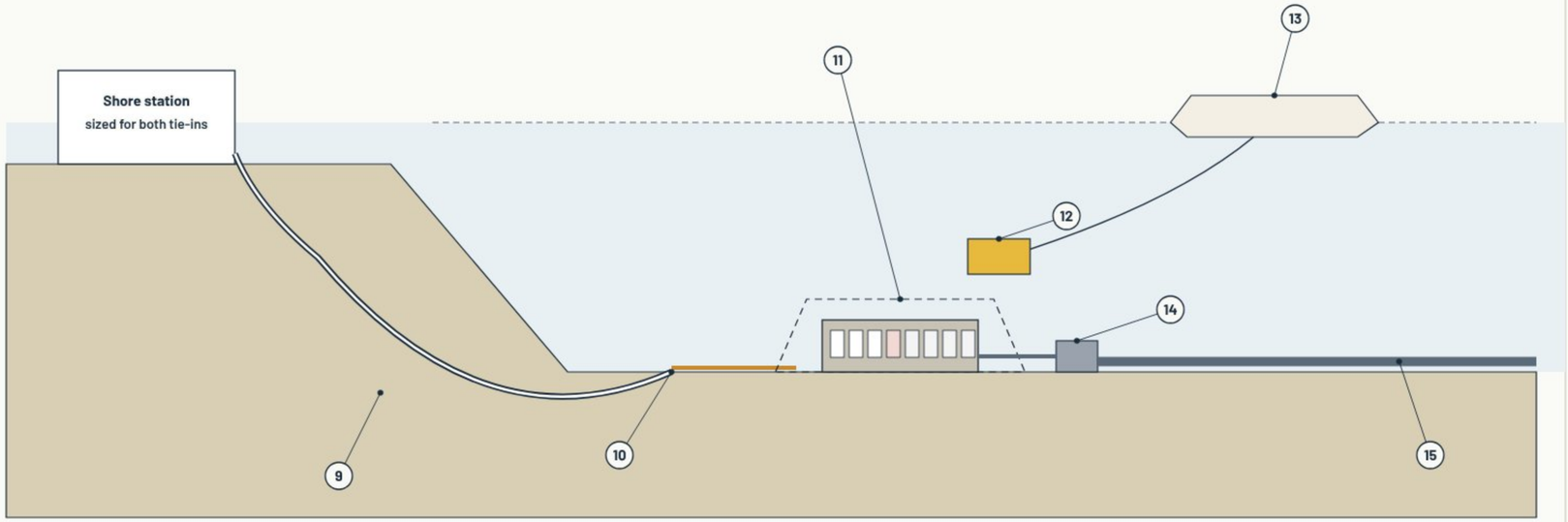

Manifold a short way offshore in shallow water; distance and depth are set in detailed design.

Water / fuel · Fibre · Power to 36 kV · HVDC (to develop) · Armoured bundle · Next lane / empty

SUMMARY

SUBSEA NEAR-SHORE MANIFOLD

- Demonstrative, not detailed design. One manifold near shore at each landfall, with two complete tie-ins: a slot for each line (water, fibre, power, HVDC) in tie-in A, and a matching spare in tie-in B. MMC proposal.
- Tie-in A serves the lane in service. Tie-in B is empty and capped; the next lane is laid to its own towhead and connected subsea by ROV while tie-in A keeps running. The lines to land, through HDD bores, and the shore station are sized for both tie-ins.
- Published practice: manifolds with ROV-operated valves and jumpers (oil and gas); branching units add a fibre branch without disrupting the main route; wet-mate power connectors to 36 kV AC (IEC/IEEE 61886-1).
- HVDC: no subsea connector at HVDC voltage was found; the highest qualified subsea power connection is 145 kV dry-mate. The HVDC connector is technology to develop.
- Distance offshore, depth and layout are assumed; detailed design.

PATENTS P1 · P2 · P4 · P5

CALLOUTS

1. HDD bores under the beach
2. Protection structure
3. Slot 4: HVDC connector — to develop
4. Towhead A: bundle split into lines
5. Lane in service (armoured bundle)
6. Next lane, to towhead B
7. Tie-in B: slots 5–8 empty, capped
8. Tie-in A: slots 1–4 in service
9. HDD bore under the beach and surf zone
10. Bore exit on the seabed
11. Manifold under a protection structure
12. ROV makes the connection
13. Support vessel (DP)
14. Towhead
15. Armoured bundle to sea

MULTI-MODAL CORRIDORS · MMC-DWG-007-04 · SUBSEA NEAR-SHORE MANIFOLD

Schematic — not to scale unless dimensioned · P1 · P2 · P4 · P5
Rev E · 21 Nov 2026 · BB (Boh Brett) Murrell

MMC-DWG-007-05 · SUBSEA SERVICE FLEET

DEMONSTRATIVE, NOT DETAILED DESIGN · ONE STANDARD · SIDE VIEWS AT ONE SCALE · REPAIR AND ROV ON ONE STANDARD HULL

A · LAY VESSEL, SIDE: HVDC OR FIBRE (THREE PER FORMATION)

Reference: largest published 171 m x 34–38 m, carousels to 18,000 t

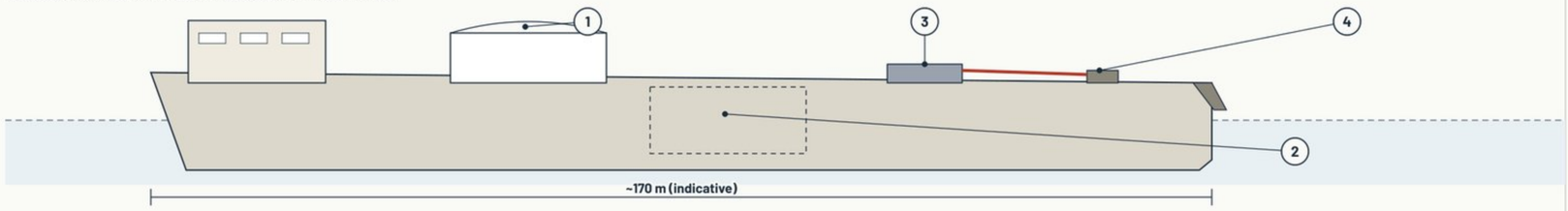

B · LAY VESSEL, CENTRE: PIPE REEL, JOINING AND ARMOURING

Same lay hull. Reference reel: 5,600 t, pipe 4–20 in, 21 m aligner (Seven Vega)

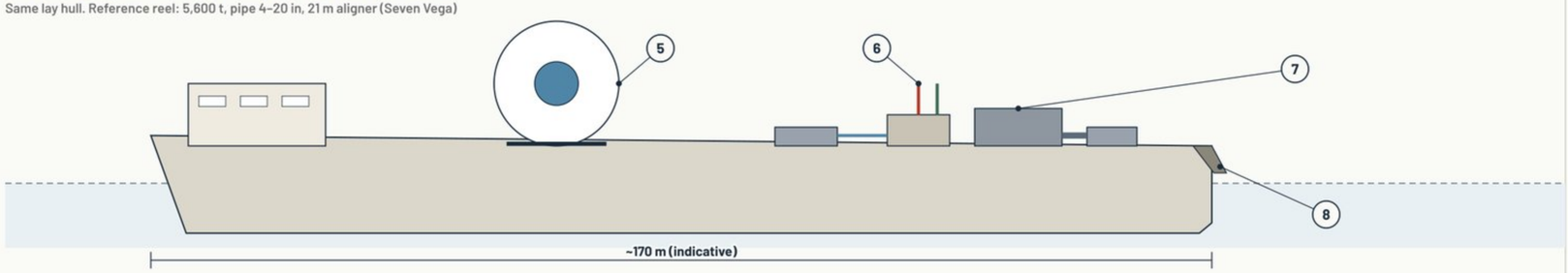

C · STANDARD SERVICE HULL, REPAIR FIT-OUT: RETRIEVES THE BUNDLE, REPAIRS ON DECK

Reference: Nexans Aurora 149 m x 31 m, 10,000 t, fitted for bundle laying and jointing, with ROVs

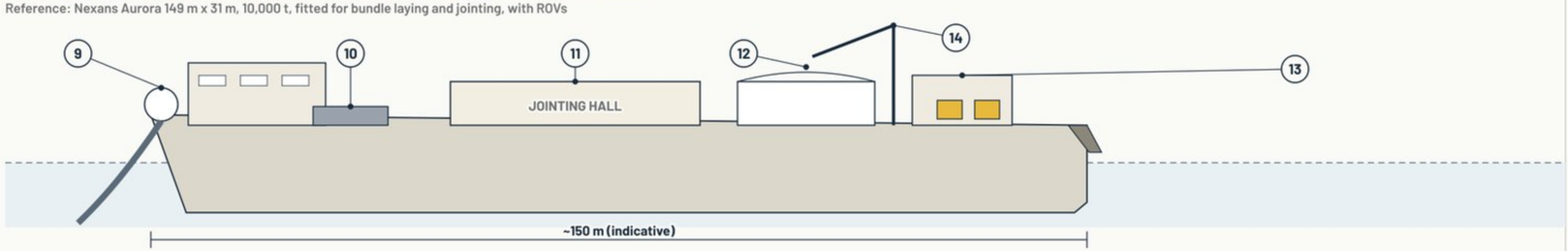

D · STANDARD SERVICE HULL, ROV SUPPORT FIT-OUT: CONNECTIONS AT THE MANIFOLD, INSPECTION

Same hull as C. Reference IMR/ROV vessels ~96–97 m with two work-class ROVs (DP2)

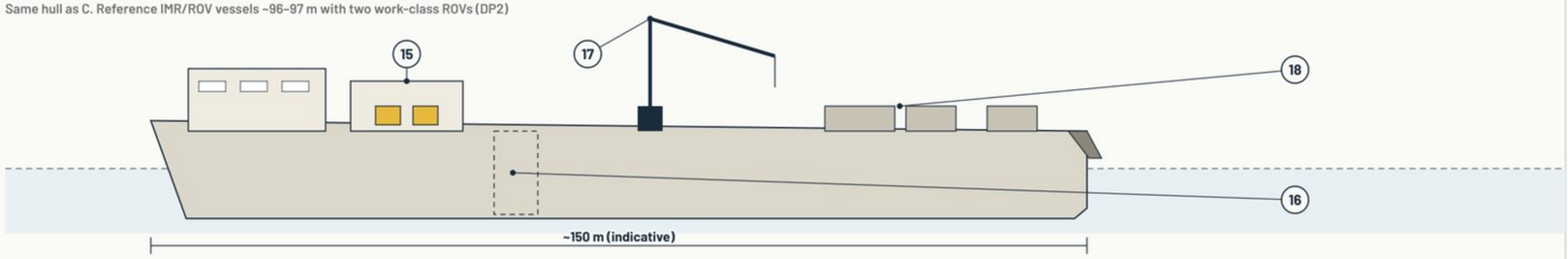

All four views at one scale. The repair and ROV fit-outs share one standard hull; the lay vessels share one lay hull.

Hull · Tensioner / cable engine · Work-class ROV · HVDC · Water pipe · Armoured bundle

SUMMARY

SUBSEA SERVICE FLEET

- Demonstrative, not detailed design. A standard subsea service fleet: built to one standard, made locally in each region. MMC proposal.
- Lay vessels (A, B): ~170 m; three per formation, one line each. The centre vessel carries the pipe reel and joins and armours the lines (armouring at sea proposed). Largest published: 171 m x 34–38 m, carousels to 18,000 t.
- Repair (C): retrieves the armoured bundle over the bow and repairs it on deck, so it is large: cable engine, jointing hall amidships, spare-bundle carousel, crane and two ROVs. Reference: Nexans Aurora, 149 m x 31 m, fitted for bundle laying and jointing.
- ROV support (D): same standard hull as C with a ROV fit-out: hangar, moonpool, heave-compensated crane and deck space for manifold modules. Published ROV vessels are smaller (~96–97 m) and use their own designs; one hull for both is an MMC proposal.
- Hull sizes, heights and equipment positions are indicative; detailed design.

PATENTS P1 · P2 · P4 · P5

CALLOUTS

1. Carousel above deck (25 m dia.)
2. Carousel below deck
3. Cable tensioners
4. Side chute: line to the centre vessel
5. Pipe reel (reel-lay)
6. HVDC and fibre in from the side vessels
7. Joining, then armouring (proposed)
8. Stern chute: bundle to the seabed
9. Bow sheave: bundle recovered over the bow
10. Cable engine
11. Jointing hall amidships (less roll and pitch)
12. Spare bundle carousel
13. ROV hangar: two work-class ROVs
14. Crane
15. ROV hangar: two work-class ROVs
16. Moonpool
17. Heave-compensated crane
18. Manifold modules and towheads as deck cargo

MULTI-MODAL CORRIDORS · MMC-DWG-007-05 · SUBSEA SERVICE FLEET

Schematic — not to scale unless dimensioned · P1 · P2 · P4 · P5
Rev A · 13 Nov 2026 · BB (Boh Brett) Murrell

MMC-DWG-007-06 · STANDARD SEA PLATFORM

DEMONSTRATIVE, NOT DETAILED DESIGN · ONE PLATFORM DESIGN, BUILT IN SERIES · SAME TOPSIDE MODULES · JACKET BY WATER DEPTH

A · ELEVATION: LINES RISE TO THE DECK AND ARE JOINED IN THE DRY

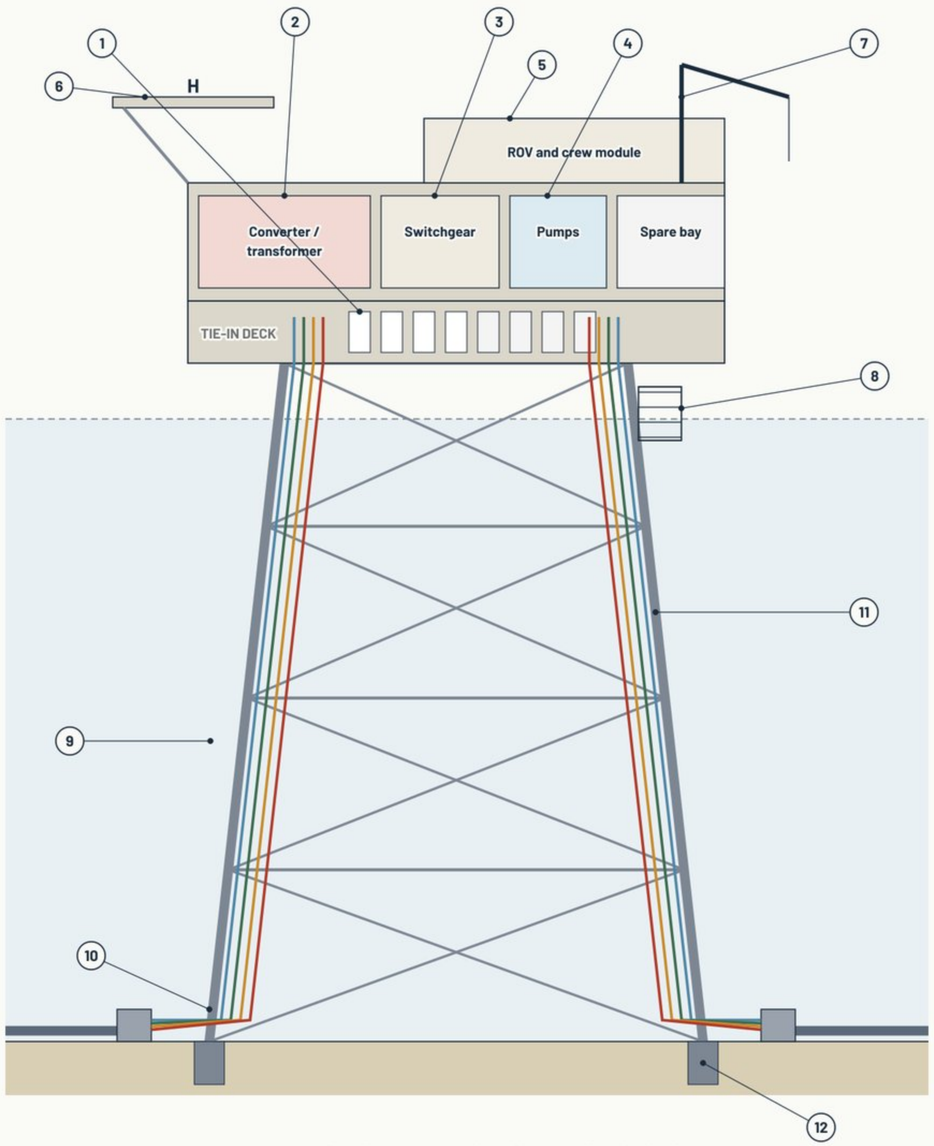

Lanes from two directions shown; topside heights and air gap indicative.

B · MAIN DECK PLAN: THE SAME MODULES ON EVERY PLATFORM

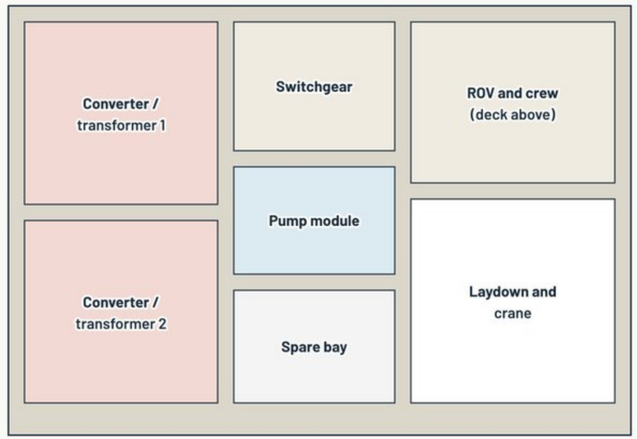

Standard module footprint: modules swap between platforms.
Converter 2 and the spare bay are fitted when the second lane arrives.

C · ONE TOPSIDE, THREE JACKETS: CHOSEN BY WATER DEPTH

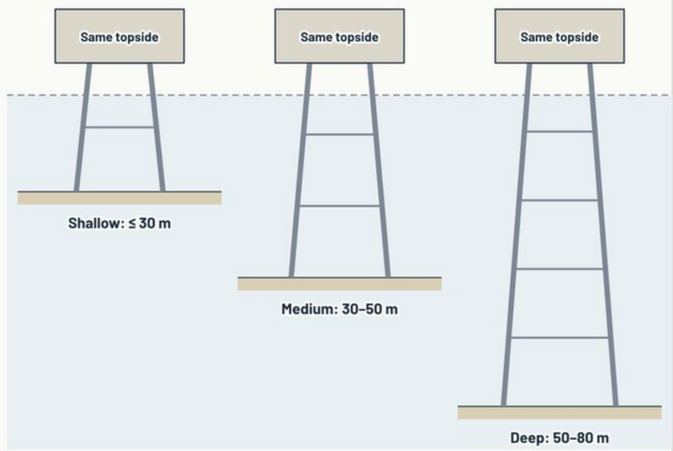

Depth bands assumed. Published reference: TenneT 2 GW standard platform in 40–45 m of water.

Water · Fibre · Power 36 kV · HVDC · Armoured bundle · Steel jacket

SUMMARY

STANDARD SEA PLATFORM

- Demonstrative, not detailed design. A standard sea platform for junctions at sea: one design, built in series. The near-shore manifold stays at landfalls. MMC proposal.
- Lanes arrive on the seabed, are split at towheads, and rise inside the jacket through J-tubes to the tie-in deck, where the lines are joined in the dry: no subsea connector is needed, HVDC included. Two sets of tie-in positions, as on the manifold.
- The topside carries standard modules: converter / transformer, switchgear, pump module for the water line, ROV and crew module, helideck, crane and boat landing. Modules have a standard footprint and swap between platforms; the second converter is fitted when the second lane arrives.
- One topside, three jackets chosen by water depth. Precedent for standardising: TenneT 2 GW one-fits-all HVDC platform, 14 links by 2032; topside 25,500–32,000 t, jacket 9,500–13,000 t, 40–45 m of water.
- Module set, layout, depth bands and sizes are assumed; detailed design. Other types (artificial island, MMC pylon platform) are on the Subsea Equipment page.

PATENTS P1 · P2 · P4 · P5

CALLOUTS

1. Tie-in deck: lines joined in the dry
2. Converter / transformer module
3. Switchgear
4. Pump module (water line)
5. ROV and crew module
6. Helideck
7. Crane
8. Boat landing
9. J-tubes: lines rise inside the jacket
10. Towhead: bundle split into lines
11. Steel jacket
12. Piles

MULTI-MODAL CORRIDORS · MMC-DWG-007-06 · STANDARD SEA PLATFORM

Schematic — not to scale unless dimensioned · P1 · P2 · P4 · P5
Rev A · 13 Nov 2026 · BB (Boh Brett) Murrell



A DESERT ZONE: THE SAHARA

Algiers to Kano

The MMC Trans-Saharan corridor, linking the Mediterranean to West Africa across the Sahara.

THIS CORRIDOR (ILLUSTRATIVE)	
Corridor length	**~3,005 km**
Town hubs, every ~100 km	**30**
At the 5 GW standard	**~150 GW**
Each expanded to 20 GW	**~600 GW**
Water	**from the south**
Power	**north to Europe**

- MMC corridor: maglev, freight, aqueduct, HVDC
- Town hub: town, agrivoltaics, PV, farmland (not to scale)
- Water from the south
- Power north to Europe
- Ranges: wind farms and pumped hydro

The Vision sets the Sahara zone at about 1,000 GW. One corridor of 30 hubs gives ~150–600 GW; the zone needs more hubs, more corridors, or larger hubs. Sheet 2 shows how the zone grows.

MMC CITIES · SHEET 1 OF 6

A desert zone: the Sahara

Algiers to Kano, on the corridor

Rev A · 17 Nov 2026 · hubs not to scale

GROWTH OF A DESERT ZONE: THE SAHARA

From hub to leaf

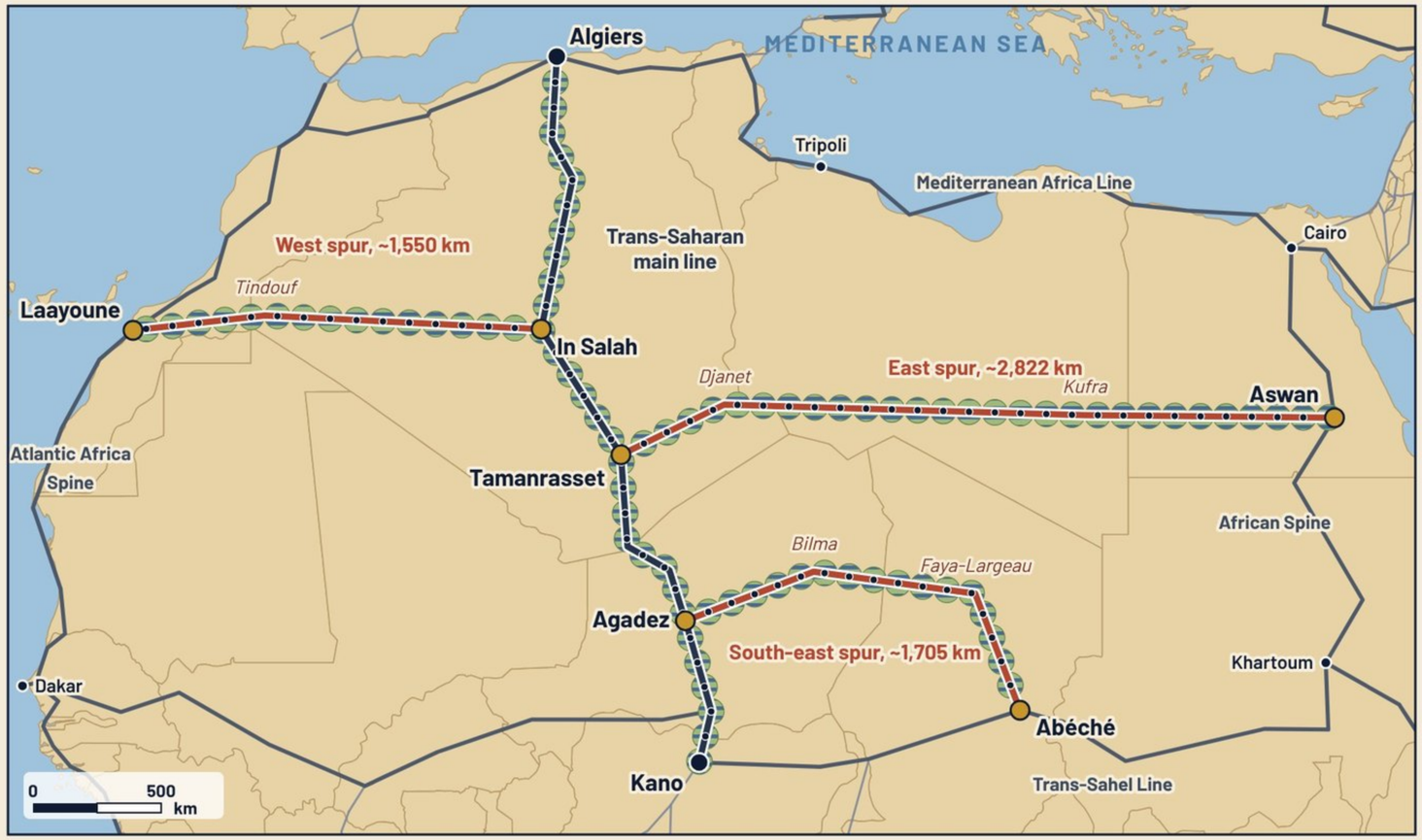

THREE STAGES (SCHEMATIC)

STAGE 1 Hubs
The hubs service the region



~150 GW

STAGE 2 Farms grow
until the hubs are in contact



~5,900 GW

STAGE 3 Spur lines
link to other main lines, like a leaf

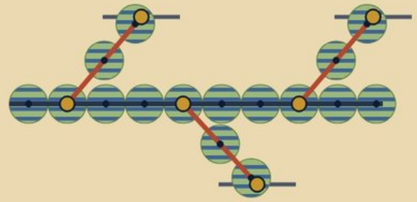

~17,500 GW

THE SAHARA ZONE (ILLUSTRATIVE)

Stage	Hubs	Area km²	GW
1 Hubs at 5 GW	**30**	**~6,000**	**~150**
2 Hubs in contact	**30**	**~235,000**	**~5,900**
3 + three spurs	**89**	**~698,000**	**~17,500**

The Vision plans ~1,000 GW per zone; 2050 world case ~4,700 GW per zone.

- PV farming (agrivoltaics), hubs in contact
- Trans-Saharan main line, Algiers to Kano
- Spur lines, linking to other main lines
- Other MMC main lines (spines)
- MMC national corridors and links
- Junction city

How it grows

1. The hubs come first and service the region.
2. PV farming spreads outwards from every hub until the hubs are in contact, 50 km out.
3. Three spur lines, ~6,077 km in all, add 59 hubs and link to other main lines: west to the Atlantic Africa Spine at Laayoune, east to the African Spine at Aswan, south-east to the Trans-Sahel Line at Abéché. The junctions grow into cities.

Assumptions

· Hubs every 100 km on both lines; 5 GW hub ~200 km².
· ~40 km² per GW across the PV farming area.
· Spur routes (via Tindouf; Djanet, Kufra; Bilma, Faya-Largeau) are illustrative.
· Area is the union of hub circles; gaps not counted.

MMC CITIES · SHEET 2 OF 6

Growth: hub to leaf

The Sahara zone, North Africa

Rev C · 17 Nov 2026 · illustrative

Ranges
wind farms and pumped hydro

Town A
5 GW standard hub

Town B
expanded to 10 GW

Town C
expanded to 20 GW

Town D
5 GW standard hub

Sheet 4 shows one hub

~100 km

~100 km

~100 km

MMC corridor
maglev, freight, aqueduct (blue), HVDC (gold)

Irrigated farmland
either side of the city, past the PV

North–south transport link
open lane through each town

EACH HUB, FROM THE CENTRE

- Town, 0–2 km
- Agrivoltaics, 2–4 km
- PV, 4–7 km
- CSP and wind, 7–8.2 km
- Expansion rings, +5 GW each
- Dashed: room to expand to 20 GW
- Irrigated farmland

MMC CITIES · SHEET 3 OF 6

Four town hubs

Along the corridor, in the desert

Rev C · 17 Nov 2026 · hub rings to scale

0 25 50 km

N

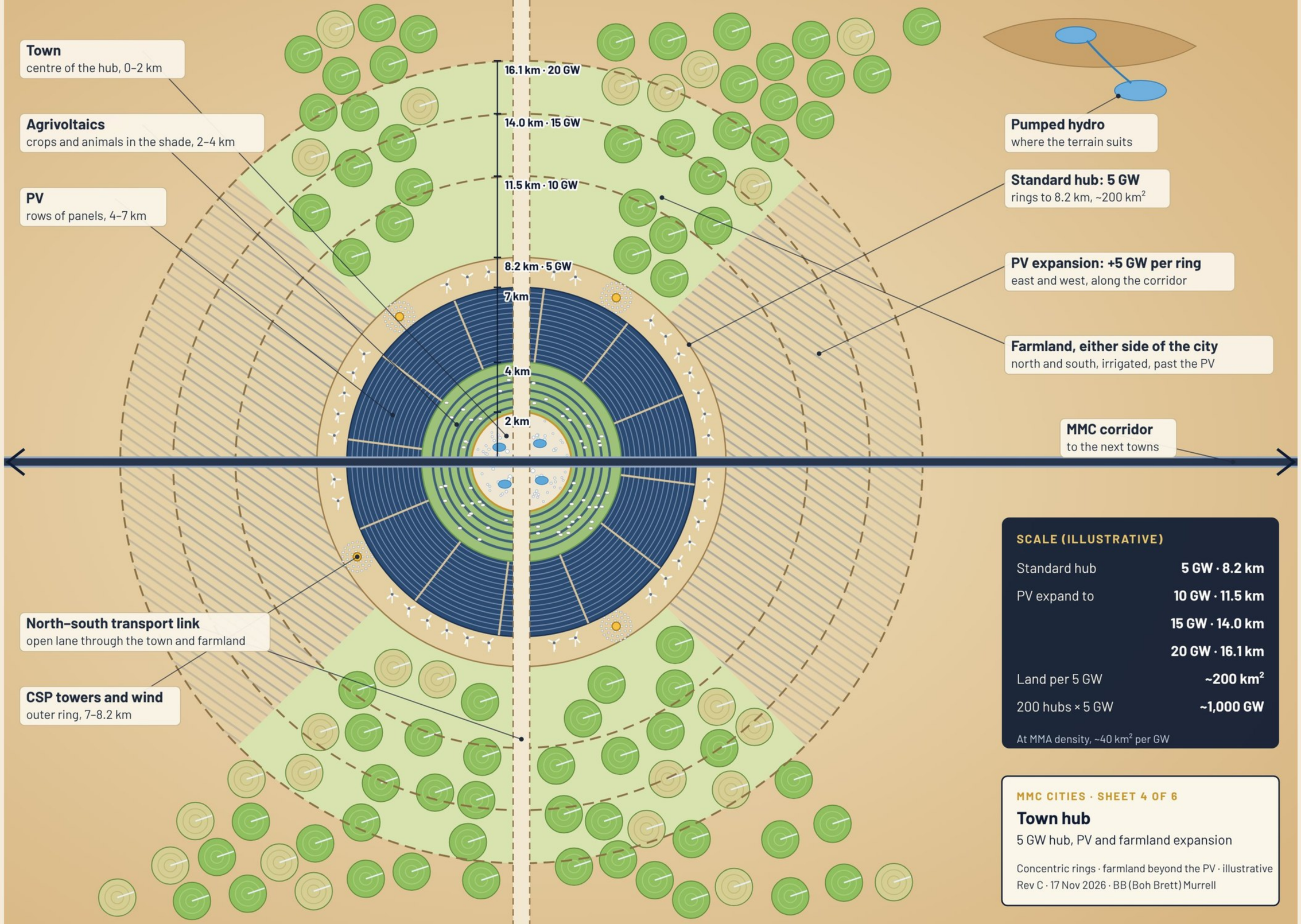
Town
centre of the hub, 0–2 km
Agrivoltaics
crops and animals in the shade, 2–4 km
PV
rows of panels, 4–7 km
North–south transport link
open lane through the town and farmland
CSP towers and wind
outer ring, 7–8.2 km
16.1 km · 20 GW
14.0 km · 15 GW
11.5 km · 10 GW
8.2 km · 5 GW
7 km
4 km
2 km
Pumped hydro
where the terrain suits
Standard hub: 5 GW
rings to 8.2 km, ~200 km²
PV expansion: +5 GW per ring
east and west, along the corridor
Farmland, either side of the city
north and south, irrigated, past the PV
MMC corridor
to the next towns
SCALE (ILLUSTRATIVE)
Standard hub 5 GW · 8.2 km
PV expand to 10 GW · 11.5 km
15 GW · 14.0 km
20 GW · 16.1 km
Land per 5 GW ~200 km²
200 hubs × 5 GW ~1,000 GW
At MMA density, ~40 km² per GW
MMC CITIES · SHEET 4 OF 6
Town hub
5 GW hub, PV and farmland expansion
Concentric rings · farmland beyond the PV · illustrative
Rev C · 17 Nov 2026 · BB (Boh Brett) Murrell

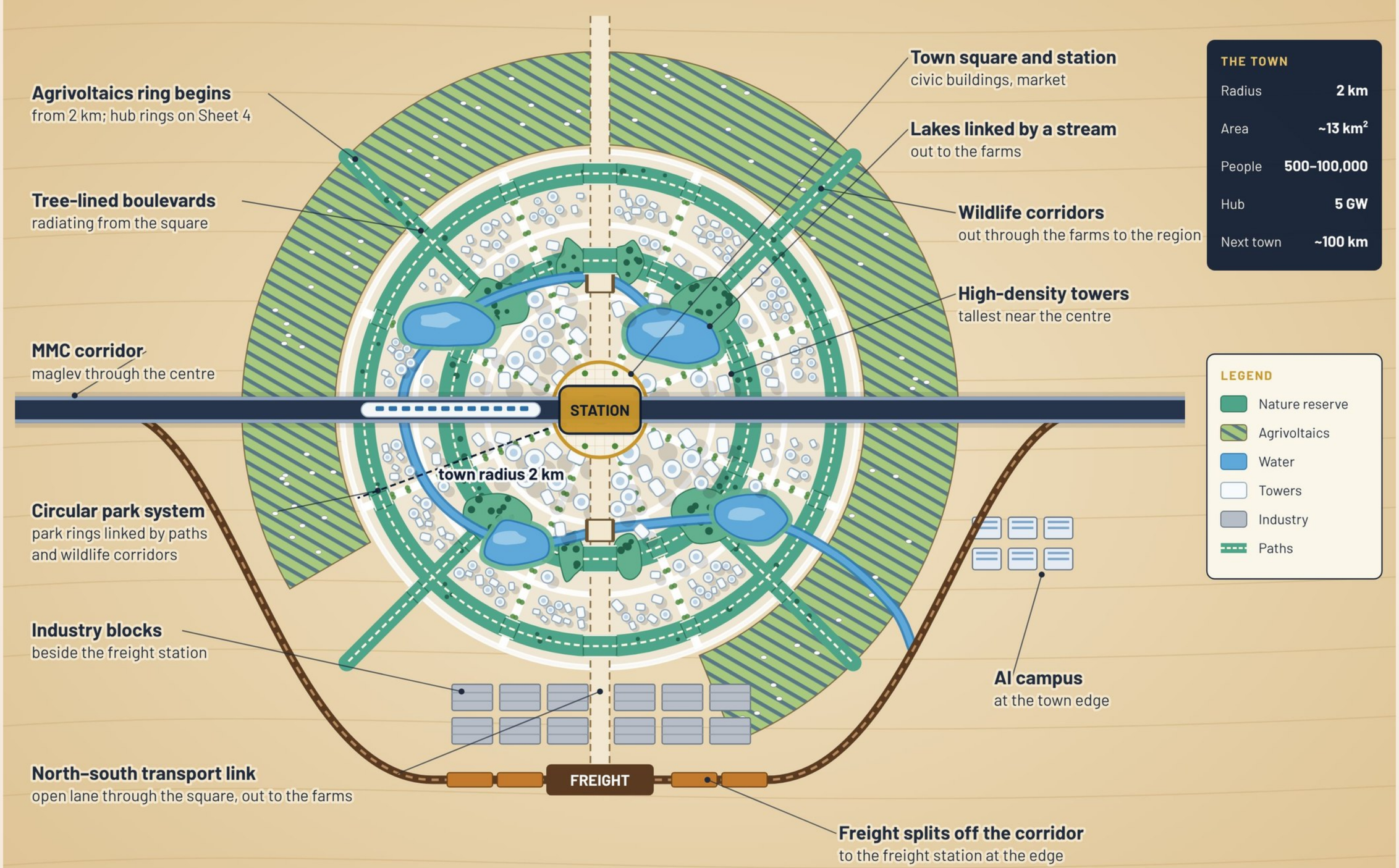

MMC CITIES · SHEET 5 OF 6

Town plan

Zoomed in from the hub, Sheet 4

Rev I · 21 Nov 2026 · illustrative · not to scale

PV FARMING · ELEVATED AGRIVOLTAICS · CROSS-SECTION

Farming under the panels

Fixed panels on a steel structure, high enough for full-size machinery to work the crop underneath.

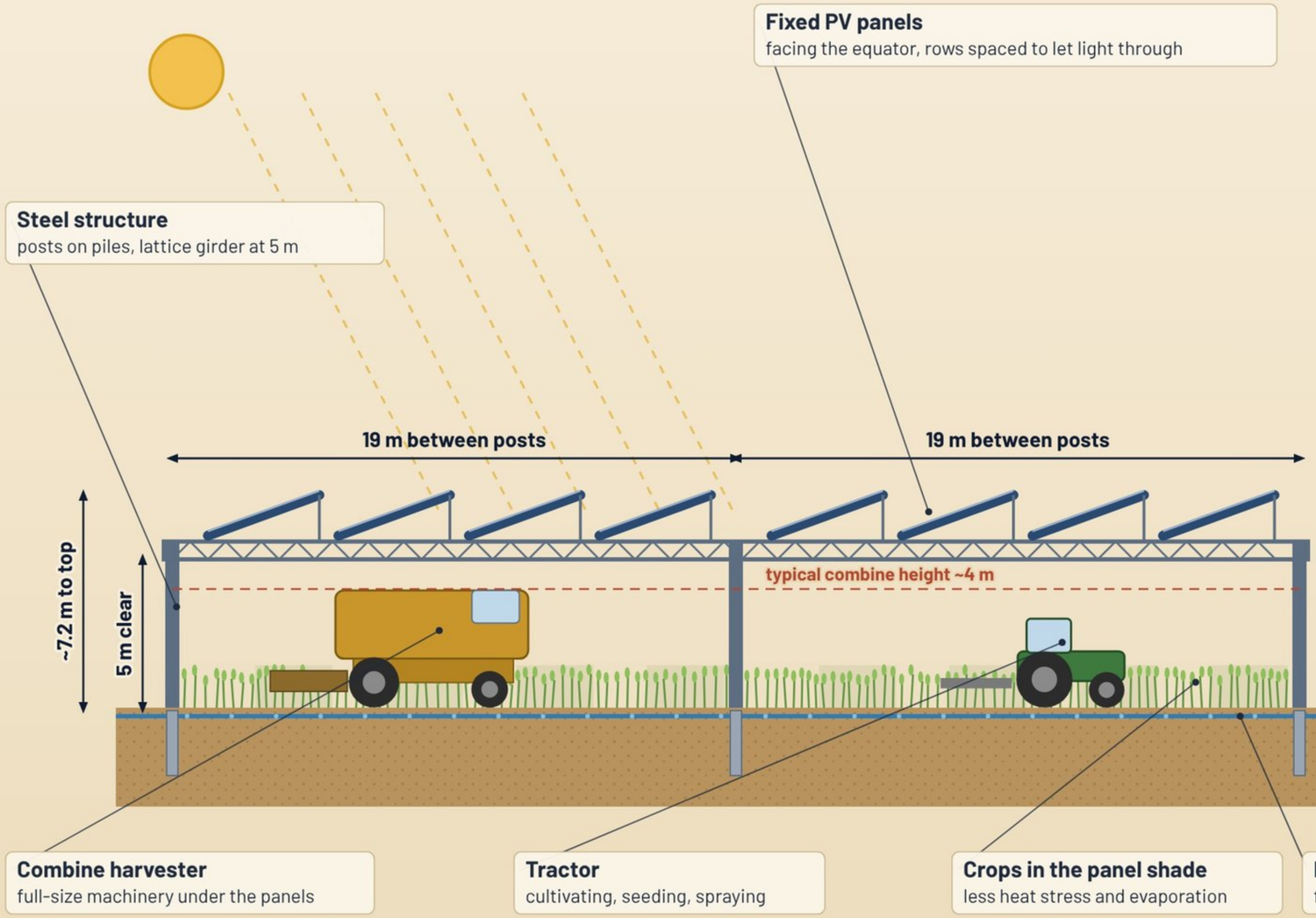

MMC STANDARD (STARTING POINT)

Clearance	**5 m**
Posts apart	**~19 m**
Panels	**fixed**
Grazing zones	**~2.1 m clear**

GLOBAL REFERENCES

Germany, Heggelbach (2016)
5 m clear, ~8 m high; posts 19 m x 12 m; 95% of the land under it farmed

Germany, DIN SPEC 91434
overhead class: over 2.1 m clear; farm yield at least 66%; land loss at most 10%

Italy, incentive rules (2023)
modules 2.1 m up for crops, 1.3 m for livestock; 70% or more of the area farmed

Italy, REM Tec
structures 4–6 m high, posts 14 m apart, for farm machinery

Japan, draft rules (2026)
panels ~3 m high, posts 4–5 m apart, shading under 30%

China, Ningxia (1 GW)
panels 2.9 m high over goji berries, on restored desert

Machinery sizes are typical, drawn to show the fit. Panel rows, tilt and spacing are illustrative; the design is set per crop and site.

0 5 10 m · section to scale

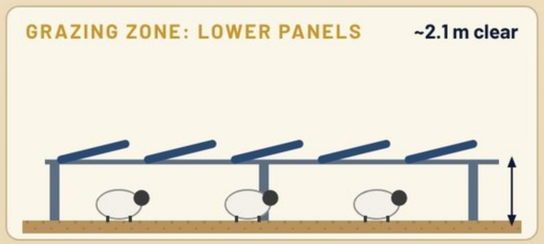

MMC CITIES · SHEET 6 OF 6

PV farming

Elevated agrivoltaics, fixed panels

Rev B · 21 Nov 2026 · illustrative

MMC WATER · WATER HARVESTING

TAKE THE FLOOD, NOT THE RIVER · MMC-VC OPEN AQUEDUCT · POWER FROM THE DESERT SOLAR PV, CARRIED ON THE AQUEDUCT · STORAGE DAMS AND PUMPED HYDRO

A · THE SYSTEM: FROM FLOOD TO STORAGE

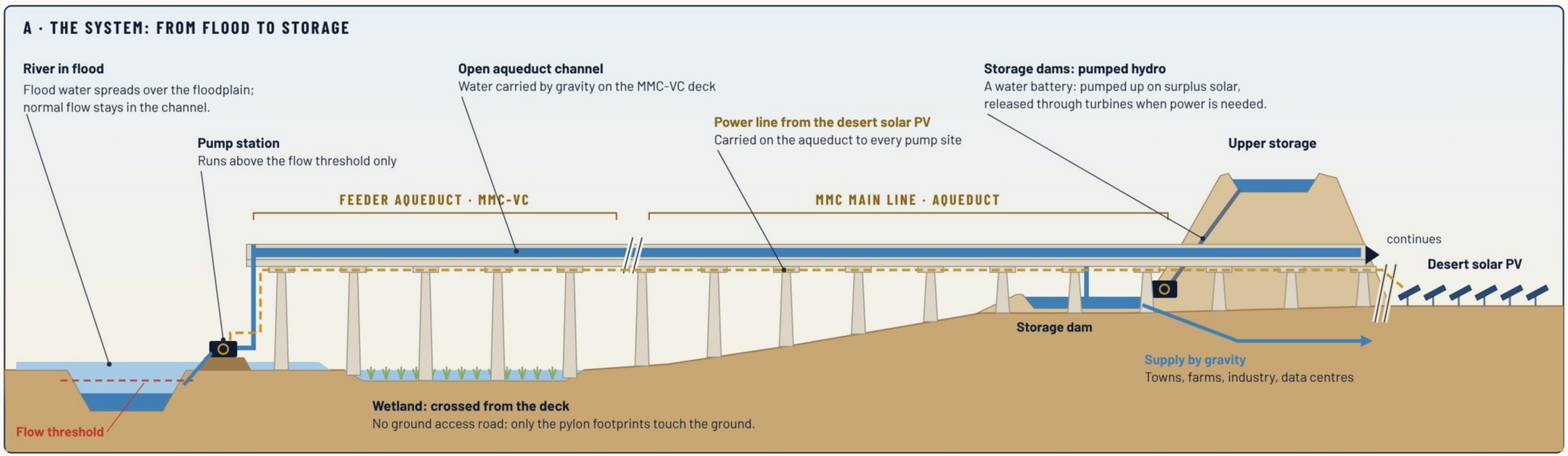

B1 · OFF-CHANNEL RING TANK

Fills only in major floods. No wall across the river.

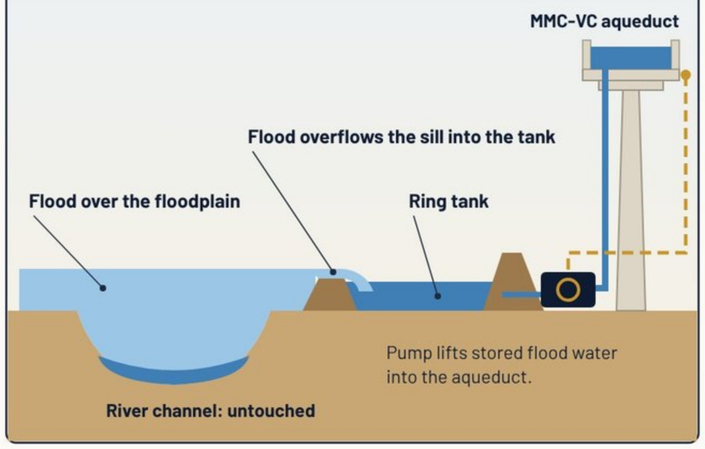

B2 · RIVER THRESHOLD PUMPING

Bank pump runs above the flow threshold only.

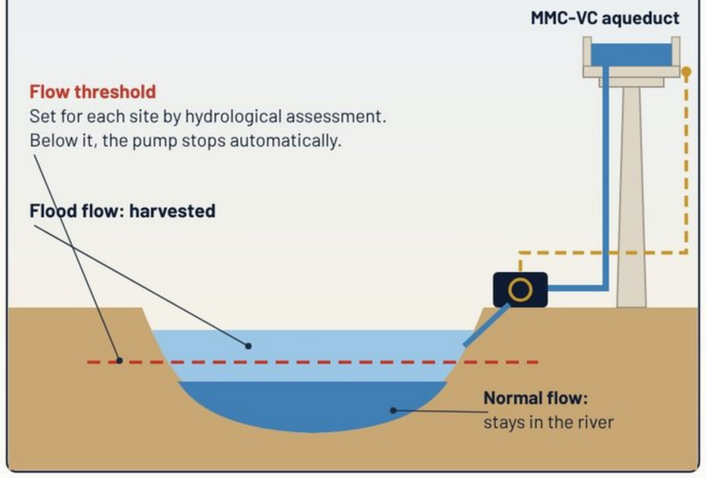

B3 · INLAND FLOOD CAPTURE

Overflow weir or threshold pump on inland channels.

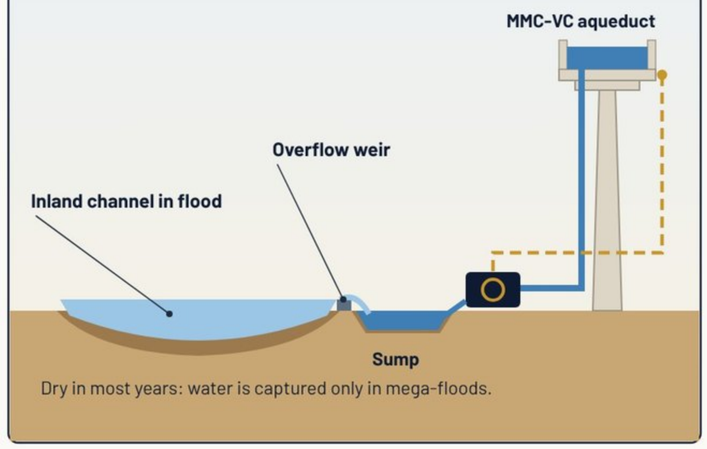

Flood flow · Normal flow / stored water · Precast concrete · Pump · Power from the desert PV · Flow threshold

Pumping runs in flood season only, above each site's flow threshold; the system is idle for six to eight months a year.
The solar PV is in the desert zones. The aqueduct carries the power line to every pump site.
Harvested water is moved to storage dams, ideally pumped hydro. MMC-VC open aqueduct shown; pipe options for detailed design.
Capture types from MMA Memo 14, The Sovereign Aqueduct Network. Schematic, not to scale.

MMC-DWG-009-01 · MMC WATER

Water harvesting

Capture, MMC-VC aqueduct, storage

Rev E · 20 Nov 2026 · schematic · BB (Boh Brett) Murrell

MMC WATER · BUILT FROM THE DECK

NO GROUND ACCESS ROAD · THE CORRIDOR IS BUILT FORWARD FROM THE COMPLETED DECK · ONLY THE PYLON FOOTPRINTS TOUCH THE GROUND

A · THE WORK FRONT: A WETLAND CROSSED FROM THE DECK

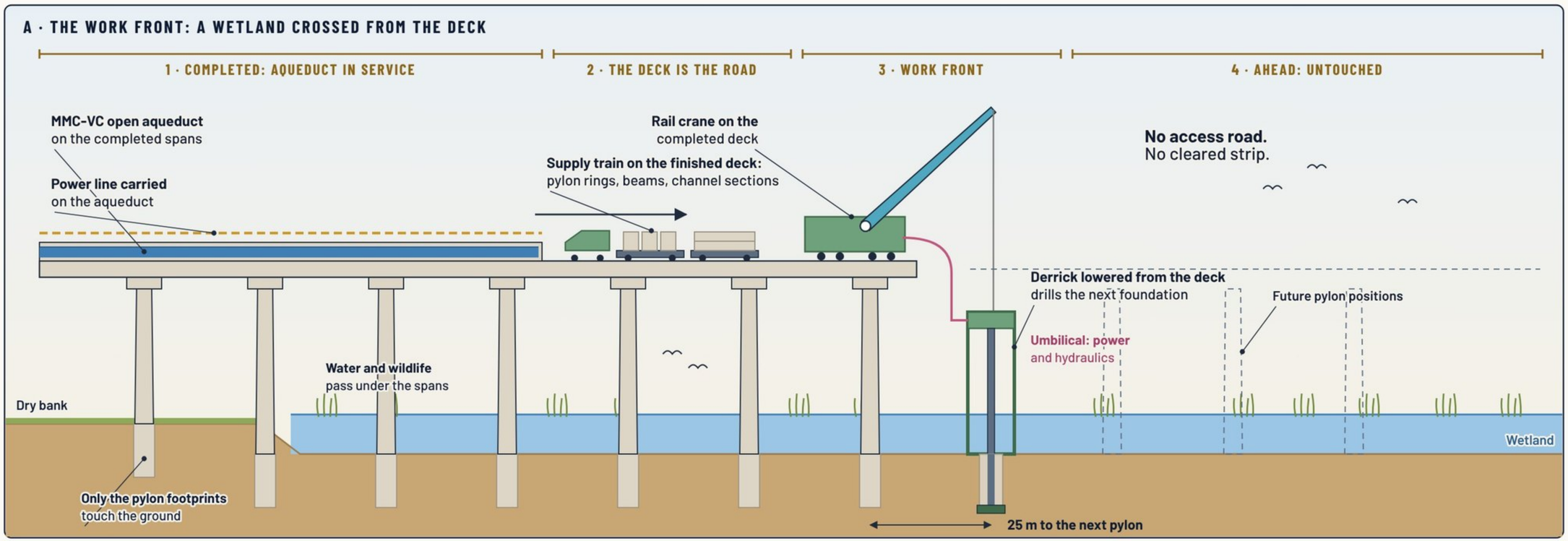

B1 · GROUND PIPELINE: SECTION ACROSS THE ROUTE

A buried pipe needs a road beside it to be built and maintained.

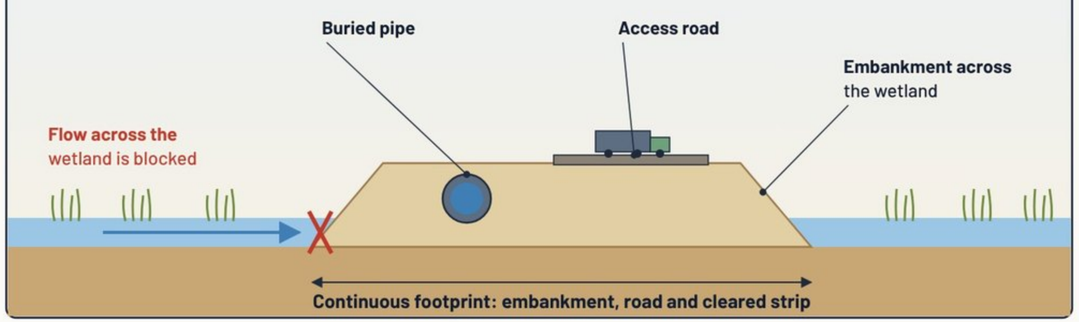

B2 · MMC-VC ELEVATED AQUEDUCT: SECTION ACROSS THE ROUTE

Built and maintained from the deck. The wetland continues underneath.

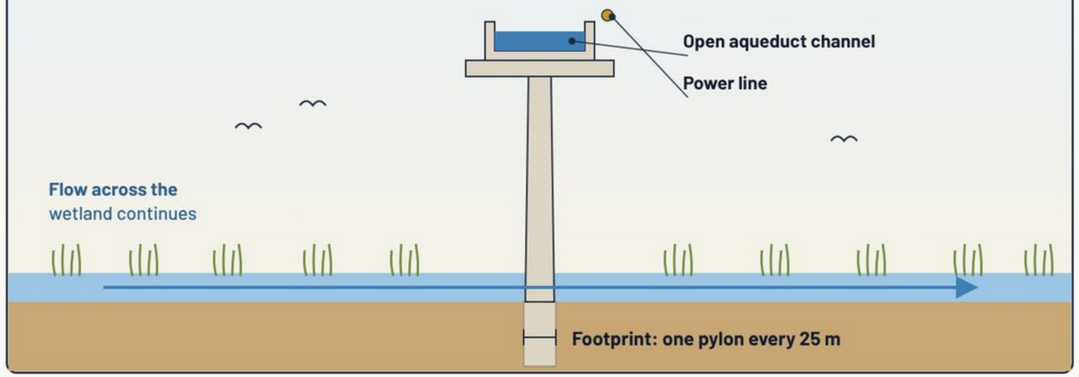

Wetland water · Water in the aqueduct or pipe · Precast concrete · Crane, derrick, locomotive · Embankment · Power line

The corridor is built forward from the completed deck. Materials arrive along the deck, so no road is cut into the wetland, river or forest below.
A rail crane on the finished deck lowers a derrick to the next pylon position, 25 m ahead, and drills the foundation in place (MMC-DWG-003-05).
Build scenarios along a whole route, and the six-step deck cycle, are on MMC-DWG-003-13. Ravines and tall pylons: detailed design.
The ground pipeline in B1 is a generic comparison, not a specific project. Schematic, not to scale.

MMC-DWG-009-02 · MMC WATER

Built from the deck

Wetland crossing, no access road

Rev A · 23 Nov 2026 · schematic · BB (Boh Brett) Murrell

MMC WATER · SYSTEM MAP: MOCK SCENARIO

FEEDER AQUEDUCTS FAN OUT TO THE RIVER SYSTEMS · ONE MAIN LINE TO THE DRY INTERIOR · SOLAR AROUND EACH TOWN POWERS EVERY PUMP · FARMING UNDER THE PV

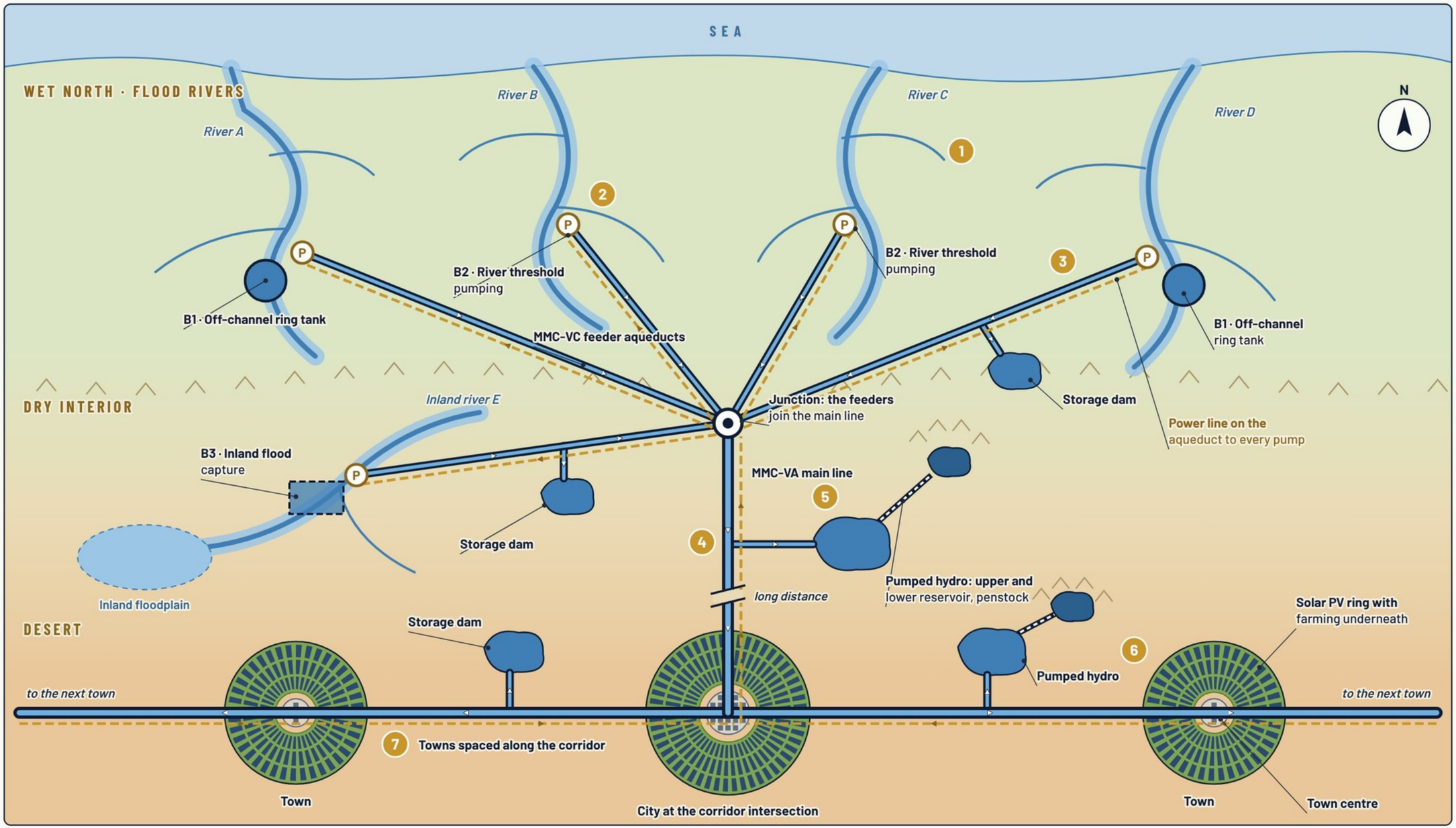

River · Flood extent · Aqueduct, flow arrowed · Power line · Pump station · Solar PV rows · Farming under the PV · Pumped hydro

1 Wet-season floods run down the northern rivers to the sea. 2 Capture sites take a share of the flood peak (types B1, B2, B3 on MMC-DWG-009-01).
3 MMC-VC feeder aqueducts fan out from one junction to each river system. 4 The MMC-VA main line carries the water to the dry interior.
5 Storage dams and pumped hydro on the lines keep flood water and store surplus power. 6 The solar PV ring around each town sends power along the aqueduct to every pump.
7 Towns are spaced along the corridor. Each has a town centre inside a solar PV ring, with farming under the PV. A city stands where two lines intersect.
Mock scenario: the rivers, sites and layout are invented. Not a route proposal. Not to scale.

MMC-DWG-009-03 · MMC WATER

System map: mock scenario

Feeders, corridor towns, storage

Rev B · 23 Nov 2026 · schematic · BB (Boh Brett) Murrell

MMC WATER · AUSTRALIA: THE MMA PLAN

NORTHERN FLOODS TO THE CENTRE · STORED AT THE ALICE HUB · DELIVERED SOUTH BY GRAVITY · CORRIDORS LINK THE PORTS AND CITIES



HOW THE PLAN WORKS

1. **Northern flood rivers**
   More than 200,000 GL a year runs to the sea, 94% of it as wet-season flood pulses.
2. **Capture the flood only**
   Target 30,000 GL a year, 12–15% of northern runoff. Dry-season flows are not touched.
3. **Feeder aqueducts**
   Elevated feeders carry the water to the nearest corridor. Lake Argyle is already built.
4. **Corridors to the Alice Hub**
   Every corridor carries water. Storage is central, at about 550 m, with storage in the ranges.
5. **Inland floods**
   Lake Eyre Basin floods are captured above the lake inlet and where corridors cross rivers.
6. **Delivered by gravity**
   From the Alice Hub the corridors carry water south. They link the ports and cities.
7. **Towns in solar and farming rings**
   A town every 100 km, in a solar PV ring with farming under it. Spurs link coastal towns.

>200,000 GL	30,000 GL	~550 M
northern runoff a year	capture target a year	Alice Hub elevation

KEY

- MMA corridor: every corridor carries water
- Feeder or storage link, with power line (indicative)
- Flood river (indicative course)
- Main river (indicative course)
- Capture site and pump station
- Storage in the ranges (pumped hydro)
- Flow to the Alice Hub
- Gravity delivery from the Alice Hub
- Town every 100 km: solar ring, farming under it
- City at a corridor intersection
- Port or capital city

Corridors: the MMA national plan (spine, seven corridors and Phase 0 spurs). Water system: MMA Memo 14, The Sovereign Aqueduct Network.
Towns: 150 drawn, one every 100 km along the seven corridors; 7 corridor intersections.
Corridor 7 (Perth to Port Hedland, with coastal spurs) is indicative. River courses, capture sites and feeder routes are indicative.
Storage in the ranges: placed on high ground read from an elevation map (MacDonnell Ranges, Hamersley Range, Queensland uplands), each linked to the nearest corridor. Indicative.
High-level map. Route-by-route detail is on modernmovementaustralia.com.au. Not to scale.

MMC-DWG-009-04 · MMC WATER

Australia: the MMA plan

Corridors, ports, cities and water

Rev B · 23 Nov 2026 · schematic · BB (Boh Brett) Murrell